Option “S”
Version: 1.7
20.03.15

Sony 9P/VDCP Time Code Converter

for a RUB AT, DT, HT, XT module with Option “S”

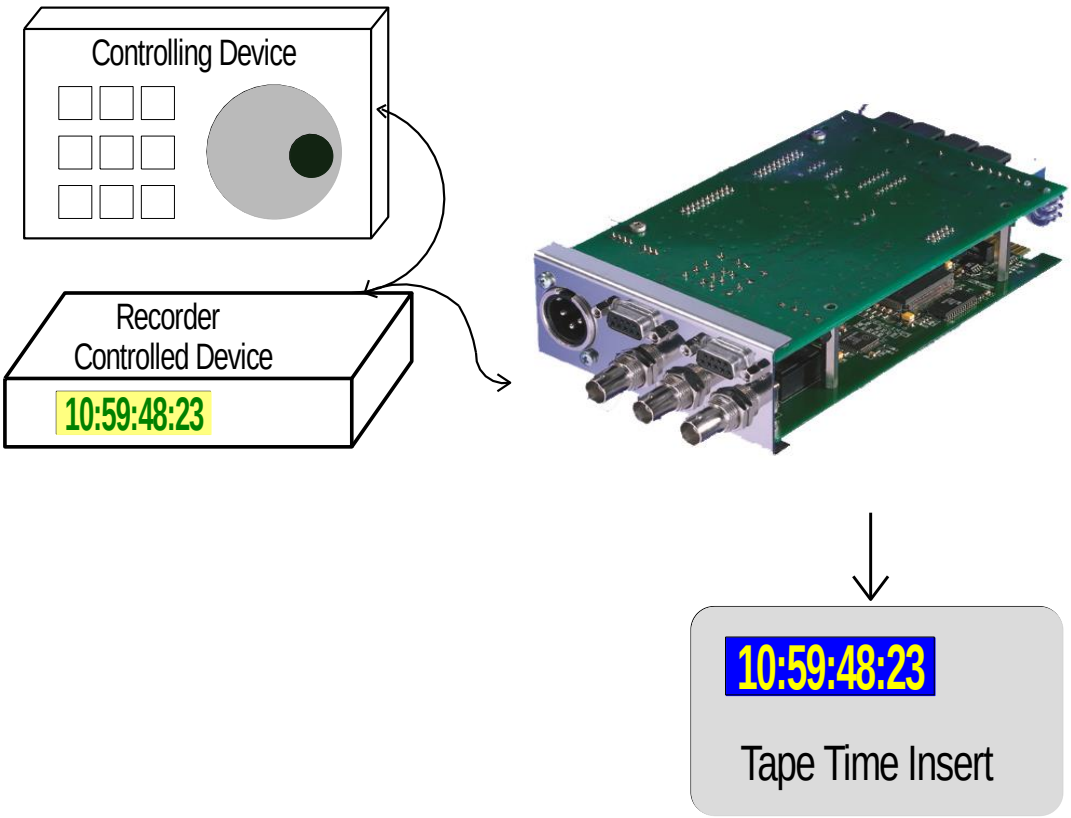

plura

CONTENTS

A1 Revision History

No.	Date	Subject
1.0	January 11, 2006	First released document
1.1	February 26, 2006	Revised.
1.2	February 27, 2008	VDCP protocol added. Completely revised.
1.3	April 09, 2008	New Jam Sync function: “Diff Stop”.
1.4	September 07, 2010	Revised.
1.5	September 21, 2010	Extended functions of operating mode RECORD.
1.6	May 05, 2011	Adapted to XT modules.
1.7	June 10, 2013	Hint on termination (chapter 2.1) added.

A2 Copyright

For further information please contact your local dealer or:

PLURA Europe GmbH

Muehlweg 11
D-73433 Aalen
Phone: ++49 - (0)7361 – 589 46 0
Fax: ++49 - (0)7361 – 589 46 55
E-Mail: info@plurabroadcast.com
Internet: http://www.plura.tv

A3 General Remarks

This manual is a supplement to the “Functional Description & Specifications” of the appropriate module (AT or DT or HT or XT).

It describes a special function of the module realized by an optional firmware.

A module with this special option may have not all the functions as there are in a standard module.

1 Overview

This option handles a time code from a serial interface in order to visibly insert it in a video window or to convert it to time code types as LTC/(D)VITC/ATC (depending on the module’s type and configuration). Different modes of operation are available. The serial interface accepts the "Sony Protocol for Video Recorders" (Sony 9p) or the ”Video Disk Control Protocol” (VDCP). The following parameters of the serial interface are usually fixed in these modes of operation:

RS422, baud rate = 38400, 8 data bits + one odd parity bit + one stop bit.

- In the mode of operation **MONITOR,** the rubidium module listens (monitors) an existing connection between a "controller" (MASTER) and a "controlled device" (SLAVE), without sending or answering any commands. A serial interface time code now can be converted to an LTC/(D)VITC/ATC (depending on the module’s type and configuration) and can be visibly inserted into a video signal.
- In the mode of operation **SLAVE,** the rubidium module functions like a "controlled device" (SLAVE), i.e. it receives time code inquiries from a "controller" (MASTER) and answers to them. The LTC/(D)VITC/ATC (depending on the module’s type and configuration) read by the module thus will be converted into a serial interface time code.
- In the mode of operation **RECORD,** the rubidium module functions as a "controlled device" (SLAVE). A "controller" (MASTER) sends commands, which are answered by the Rubidium module. This mode of operation lets the Rubidium module work as a time code generator, whose initial start value can be set via commands from a serial interface.
- In the mode of operation **MASTER,** the rubidium module functions as a "controller" (MASTER). It sends commands to a "controlled device" (SLAVE) (e.g. a video recorder), inquiring time code which can be used to generate an LTC/(D)VITC/ATC (depending on the module’s type and configuration) and can also be visibly inserted into a video signal.

If none of these modes have been switched on, the module operates as a standard module.

With option “S”, the following additional time code functions are also available, which can be meaningfully used with the modes of operation described above:

- In the Jam Sync function **“Converter”** plausible time code values are read and directly transferred to the time code generator without further examination, so even a “still” time code will be accepted.
- In the Jam Sync function **“Difference”** synchronization occurs only, if the difference in time between the read and the generated time code has exceeded a preset value.
- The output of the LTC of generator can be switched off automatically ("**muted**"), if no new current values either are being generated or read during a Jam Sync function.

2 Serial Interface Installation

2.1 Configuration

The serial interface accepts the "Sony Protocol for Video Recorders" (Sony 9p) or the ”Video Disk Control Protocol” (VDCP) . The protocol and the parameters of the serial interface can be selected utilizing the “Serial” function with one of the configuration tools.

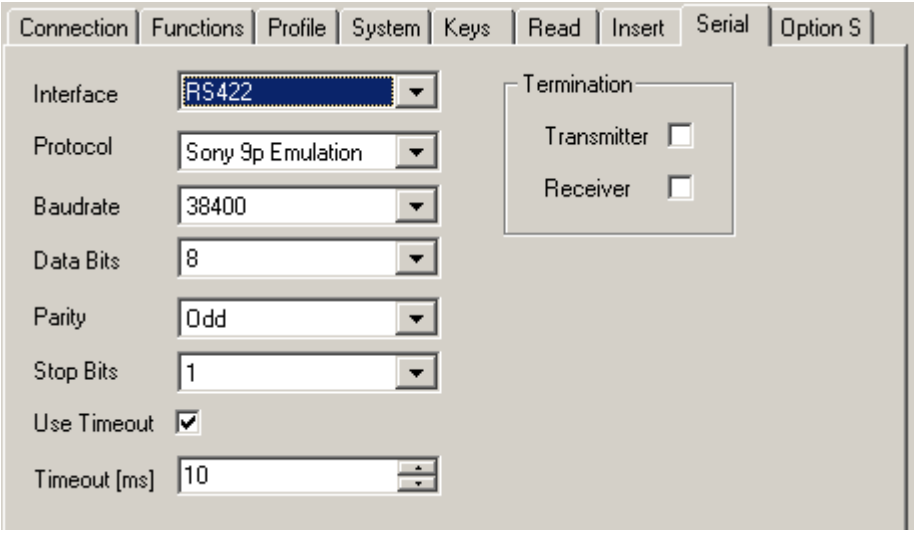

Interface	Select the electrical interface:	*Off*	interface switched off
		RS232	interface according to RS232 standard
		RS422	interface according to RS422 standard
		RS485	interface according to RS485 standard

Protocol Select a data protocol from the dropdown list: **Sony 9p Emulation** or **VDCP**.

Baudrate Choose the baud rate:
2 400 / 4 800 / 9 600 / 19 200 / 38 400 / 57 600 / 115 200

Data Bits *7* or *8* data bits

Parity	Select the parity mode:	*None*	without parity
		Even	even parity bit
		Odd	odd parity bit

Stop Bits *1* or *2* stop bits

Use Timeout A timeout may be used for synchronisation.

Timeout [ms] Choose a timer value for the timeout counter. Please choose a value suitable to the selected baud rate.

Termination If RS422 has been selected, transmitter and receiver lines can get a termination. If RS485 has been selected, the transmitter line can get a

termination. The termination influences the data level! In case of any communication problems please check whether any change at this set-up may solve the problem.

2.2 Operation Mode MONITOR Connecting

The Rubidium module monitors an existing connection between a "controller" (MASTER) and a "controlled device" (SLAVE). In this mode of operation the outputs T-/T+ of the module are switched off and it only receives the data transmitted from the "controlled device" (SLAVE). Please use the following adapter cable (can be ordered by using A+V product code: K_DS_S1):

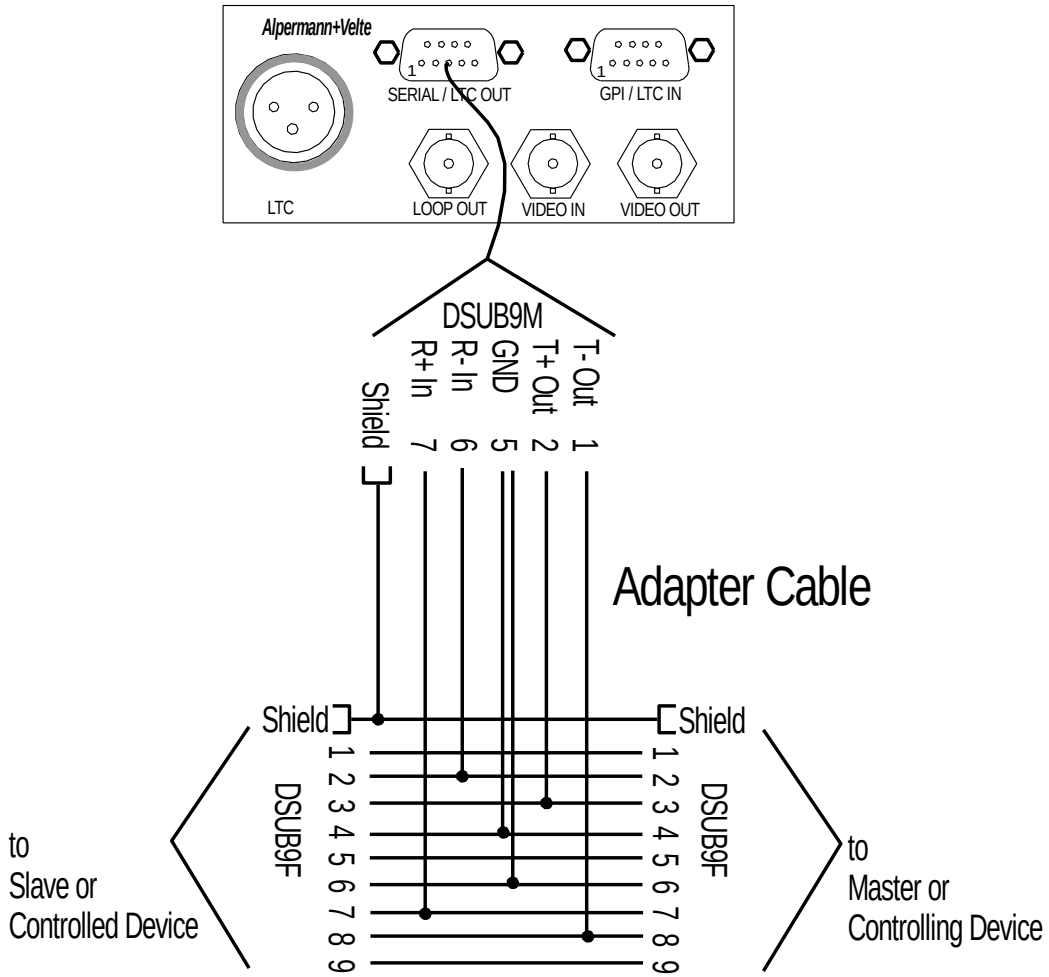

2.3 Operating Mode SLAVE or RECORD Connecting

The Rubidium module is connected to **one** "controller" (MASTER). Please use the following adapter cable (can be ordered by using A+V product code: K_DS_S2):

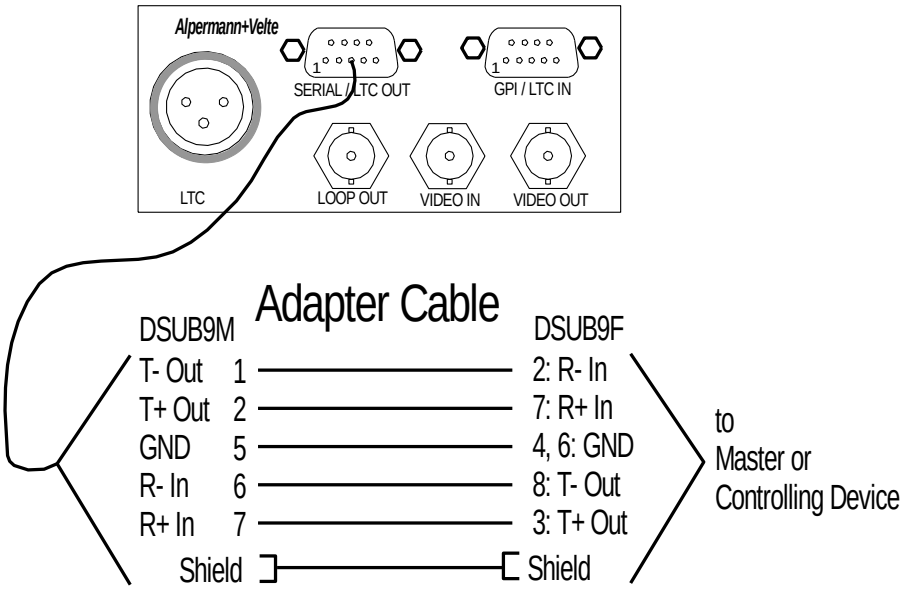

2.4 Operating Mode MASTER Connecting

The Rubidium module is connected to **one** "controlled device" (SLAVE). Use the adapter cable used for the mode of operation MONITOR or the following adapter cable (A+V product code K_DS_S3):

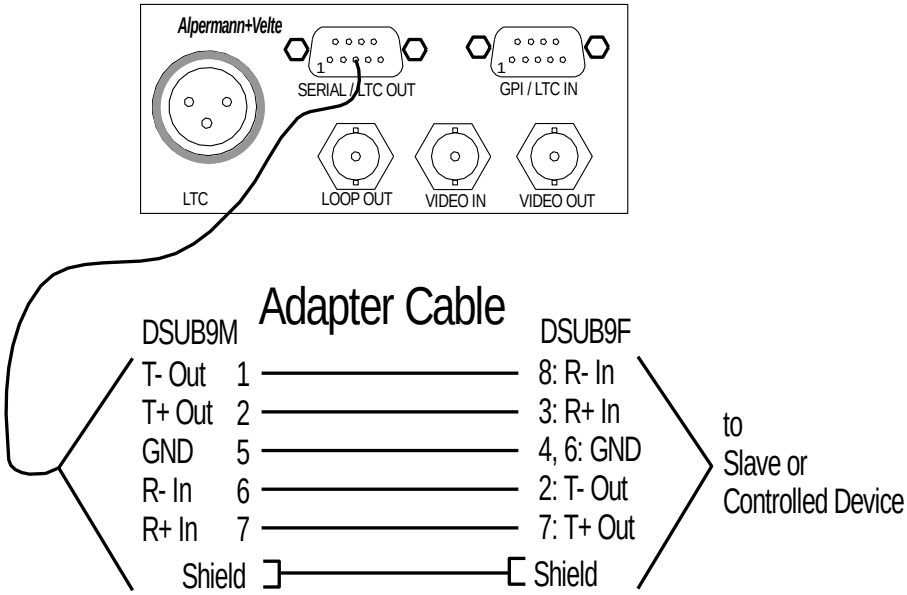

3 The Sony 9p Protocol

Select the "Sony Protocol for Video Recorders" (Sony 9p) utilizing the “Serial” function with one of the configuration tools:

3.1 Choosing an Operating Mode

Select the operating mode utilizing the “Option S” function with one of the configuration tools:

Mode: **Off**
Slave
Monitor
Record
Master

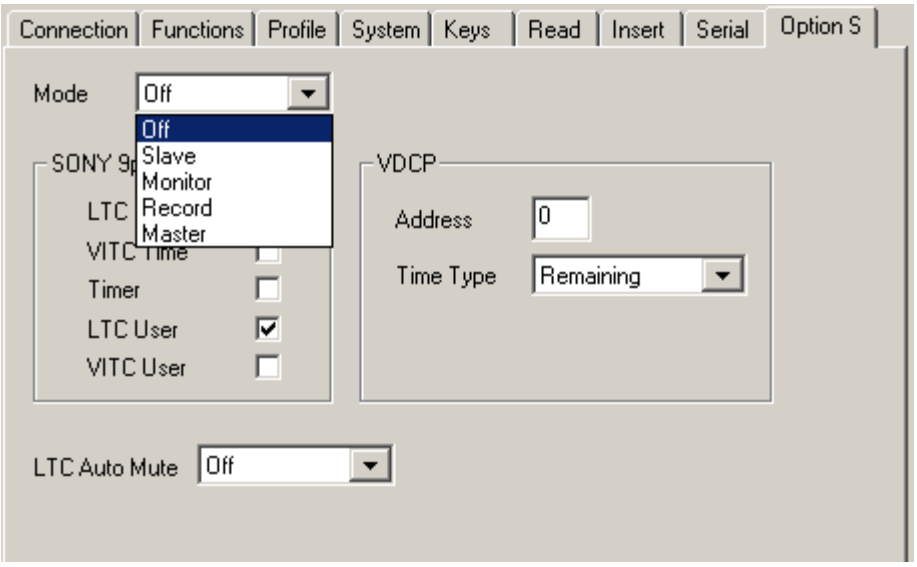

In the mode of operation “**Monitor**” the type of the time code to be accepted by the module can be selected. Any combination of time codes is permitted.

In the mode of operation “**Master**” the type of the time code to be requested by the module can be selected. Any combination of time codes is permitted.

3.2 Operating Mode MONITOR

A serial interface time code is read, converted into an LTC/(D)VITC/ATC (depending on the module’s type and configuration), and can also be visibly inserted in a video window.

The Rubidium module monitors an existing connection between a "controller" (MASTER) and a "controlled device" (SLAVE). The serial interface is set only to receive data. It receives the data transmitted from the "controlled device" (SLAVE). Use the connector cable shown at chapter “Operating Mode MONITOR Connecting”.

The type of the time code to be read is configurable. It can be LTC, VITC, or timer, time address values and user bits (see chapter "Choosing an Operating Mode"). At least one check box must be activated. The time code will be accepted only if the received time code corresponds with one of the selected time codes.

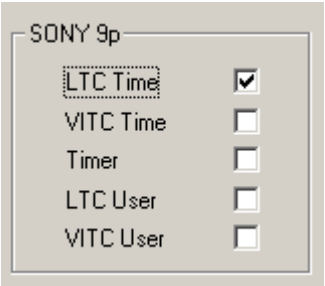

The following time code returns are relevant in this mode of operation:

CMD1/CMD2 of the return	Data
0x74 / 0x00	Timer
0x74 / 0x04 or 0x74 / 0x14	LTC Time
0x74 / 0x05	LTC User
0x78 / 0x04 or 0x78 / 0x14	LTC Time + User
0x74 / 0x06 or 0x74 / 0x16	VITC Time
0x74 / 0x07	VITC User
0x78 / 0x06 or 0x78 / 0x16	VITC Time + User

The read time code values automatically will be transferred to the "general" reader (READ) values as well. Selecting the MONITOR mode will deactivate all other time code readers for the READ function. The frame rate is adjusted to the generator’s frame rate. Example:	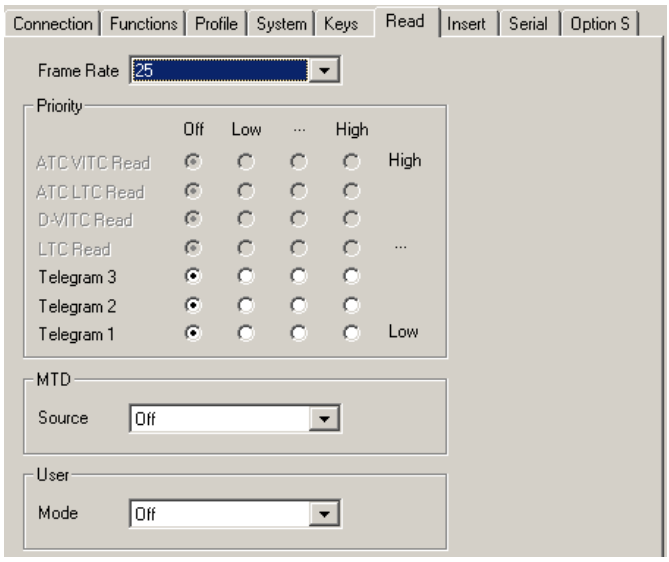

Application: Read serial interface time code and visibly insert it in a video window:

For this application we recommend to select “Read” as a source for the video window. Thus the non-interpolated read time code will be inserted.

Application: Convert serial interface time code:

Conversion of a serial interface time code to a continuous LTC/(D)VITC/ATC (depending on the module’s type and configuration) needs to activate a suitable Jam Sync function. In this case the synchronization between the devices involved has to be considered. If all devices use the same sync source (e.g. a black-burst video signal), the function "Continuous" or "Cont. 1 Frame" or "Cont. Wheel" should be selected. If no synchronization is possible and time code dropouts are to be expected, try one of the "Diff" or "Cont. Wheel" functions. If the regenerated time code is to be visibly inserted, "Generate" should be selected as source for the video window.

The following setup for the four programmable light emitting diodes enables a fast and easy verification:

	LED	Function	Description
	OPER	OPER	Module is operating.
	SIGNAL	SIGNAL	LED lights up if a serial interface time code is being read.
	SET	Jam	LED lights up if read values are being accepted during a continuous Jam Sync function. LED flashes slowly if no read values are being accepted during a continuous Jam Sync function. LED flashes fast as long as a SINGLE JAM is active. LED is off when the Jam Sync is turned off.
	ERROR	ERROR	LED lights up shortly during a reading error, e.g. if a serial interface time code has been detected to fail the continuous up-counting order.

3.3 Operating Mode SLAVE

The Rubidium module reads time code and converts it into a serial interface time code.

The Rubidium module reads time code with its built in readers (LTC/(D)VITC/ATC - depending on the module’s type and configuration, TC_link). The up-to-date read values can be queried over the serial interface. The Rubidium module behaves like a "controlled device" (SLAVE), i.e. it receives time code queries from a "controller" (MASTER) and answers to them. Use the connector cable shown at chapter “Operating Mode SLAVE or RECORD Connecting”.

The following commands and inquiries are relevant in this mode of operation:

Commands/Inquiries					**Return**				
Description	CMD1 /DC	CMD2	DATA	CHECK	Description	CMD1 /DC	CMD2	DATA	CHECK
Device Type Request	$00	$11	-	$11	Device Type: Video = NTSC Video = PAL	 $12 $12	 $11 $11	 $20 $47 $21 $47	 $8A $8B
Timer Mode	$60	$36	-	$96	Timer Mode	$71	$36	$00	$A7
Request Reader Value	$61	$0C	***1**	$CHECK	Reader Value	***1**	***1**	***1**	$CHECK
Request Status	$61	$20	***2**	$CHECK	Status	***2**	***2**	***2**	$CHECK
Other Commands					ACK	$10	$01	-	$11

$CHECK hexadecimal sum of the before sent bytes

***1** Inquiry of the current values or user bits. DATA 1 bit coding:

Bit 7	Bit 6	Bit 5	Bit 4	Bit 3	Bit 2	Bit 1	Bit 0
		VITC User	LTC User	Timer 2	Timer 1	VITC Time	LTC Time

DATA 1 of the request	CMD1/CMD2 of the return	Data
0x10	0x74 / 0x05	LTC User
0x20	0x74 / 0x07	VITC User
0x30	0x74 / 0x07 or 0x74 / 0x05	VITC User – when READ actually receives VITC otherwise TC User – current time code of READ
0x01	0x74 / 0x04	LTC Time
0x11	0x78 / 0x04	LTC Time + User
0x02	0x74 / 0x06	VITC Time
0x22	0x78 / 0x06	VITC Time + User
0x0n	0x74 / 0x06	VITC Time – when READ actually receives VITC

	or 0x74 / 0x04	otherwise TC Time – current time code of READ
0xmn	0x78 / 0x06 or 0x78 / 0x04	VITC Time + User – when READ actually receives VITC otherwise TC Time + User – current time code of READ

Acknowledgment of LTC values only when the LTC reader is installed.

Acknowledgment of VITC values only when the VITC reader is installed.

To receive the desired result of a time code inquiry, the command - issued and adjusted by the CONTROLLER - and the configuration of the time code reader of the module must be balanced with each other:

- If LTC is queried only, connect an external LTC to the LTC input of the module.
- If VITC is queried only, an external VITC or DVITC video source must be connected.
- If LTC **and** VITC or a timer or any other combination is to be queried, the data from the general reader configuration by means of the READ function will be returned (configuration with the "READ" function utilizing one of the configuration tools). This general reader can read the external LTC, the VITC/DVITC/ATC (depending on the module’s type and configuration), or time code from TC_link (telegram).

***2** Status: only the bits PLAY, STAND-BY and SERVO LOCK are set to “1”. Details of the status bits are available in the document of "SONY PROTOCOL OF REMOTE-1 (9-pin) CONNECTOR".

3.4 Operating Mode RECORD

The Rubidium module generates time code. A start value can be set by serial interface commands.

Applications:

- Video tape recordings with a continuous LTC. The module simulates a recording in which the status REC is set if the command “Record” has been received. In addition one of the Jam Sync modes can be used in order to synchronize the generated time code to an external time code.
- The time code generator simulates a VTR by accepting the PLAY, STOP and CUE UP WITH DATA commands. The time code output replaces the time code of a VTR. In general, the "controller" requests a *read* time code, therefore the LTC output of the module should be connected to the LTC input. Please enable the LTC reader and select a “high” priority of the LTC reader at the “Read” function. Disable the “Jam” function.

The Rubidium module behaves like a "controlled device" (SLAVE), i.e. it receives queries from a "controller" (MASTER) and answers them.
Use the connector cable shown at chapter “Operating Mode SLAVE or RECORD Connecting”.

The following commands and inquiries are relevant in this mode of operation in addition to the table at operation mode SLAVE:

Commands/Inquiries					**Return**				
Description	CMD1 /DC	CMD2	DATA	CHECK	Description	CMD1 /DC	CMD2	DATA	CHECK
Stop	$20	$00	-	$20	ACK	$10	$01	-	$11
Play	$20	$01	-	$21	ACK	$10	$01	-	$11
Record	$20	$02	-	$22	ACK	$10	$01	-	$11
“Cue up with data” = Set Value Gen. Time	$24	$31	***1**	$CHECK	ACK	$10	$01	-	$11
Set Value Gen. Time	$44	$04	***1**	$CHECK	ACK	$10	$01	-	$11
Set Value Gen. User Bits	$44	$05	***2**	$CHECK	ACK	$10	$01	-	$11
Request Gen. Time	$61	$0A	$01	$6C	Generator Time	$74	$08	***1**	$CHECK
Request Gen. User Bits	$61	$0A	$10	$7B	Generator User Bits	$74	$09	***2**	$CHECK
Request Gen. Time +User Bits	$61	$0A	$11	$7C	Time +User Bits	$78	$08	***3**	$CHECK
Status	$61	$20	***4**	$CHECK	Status	***4**	***4**	***4**	$CHECK
Other Commands					ACK	$10	$01	-	$11

***1** DATA 1 = BCD Frames
DATA 2 = BCD Seconds
DATA 3 = BCD Minutes
DATA 4 = BCD Hours
Presets the time of the time code generator.

***2** DATA 1 = User bits of the binary groups 1+2 ("Frames")
DATA 2 = User bits of the binary groups 3+4 ("Seconds")
DATA 3 = User bits of the binary groups 5+6 ("Minutes")
DATA 4 = User bits of the binary groups 7+8 ("Hours")

***3** DATA 1...4 = Time like in *1, DATA 5-8 = User bits like in *2.

***4** Status: While the time code generator stays in “Stop” mode (after the “Stop” command), the bits STAND-BY and STOP will be set to 1. While the time code generator is counting, the bits PLAY, STAND-BY and SERVO LOCK will be set to 1. The REC bit will be set after receiving the “Record” command. This bit will be reset to 0 after a “Stop” command or after changing the operating mode. The CUE UP COMPLETE bit will be set for the first status request after a CUE UP WITH DATA command. Details of the status bits are available in the "SONY PROTOCOL OF REMOTE-1 (9-pin) CONNECTOR" document.

3.5 Operating Mode MASTER

A serial interface time code is read, converted into an LTC/(D)VITC/ATC (depending on the module’s type and configuration), and can also be visibly inserted in a video window. The Rubidium module acts as a "controller" (MASTER). Synchronized to the generated time code the module sends time code inquiries that are answered by a "controlled device" (SLAVE). Use the connector cable shown at chapter “Operating Mode MASTER Connecting”.

The type of the time code inquiry is configurable. LTC, VITC or timer, time values or user bits can be selected (see chapter "Choosing an Operating Mode"). At least one check box must be activated.

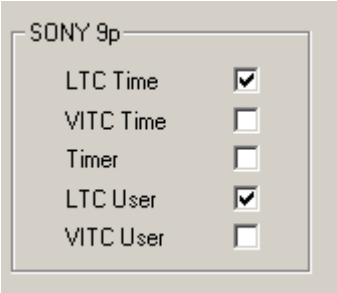

The following command will be sent frequently (every frame):

Description	CMD1/DC	CMD2	DATA	CHECK
Request Time Code	$61	$0C	$DATA1	$CHECK

$CHECK hexadecimal sum of before sent data bytes

$DATA1 bit coding:

Bit 7	Bit 6	Bit 5	Bit 4	Bit 3	Bit 2	Bit 1	Bit 0
		VITC User	LTC User		Timer	VITC Time	LTC Time

The time code values of the return are automatically set into the "general" reader (READ).
Selecting the MASTER mode will deactivate all other time code readers for the READ function. The frame rate is adjusted to the generator’s frame rate.
Example:

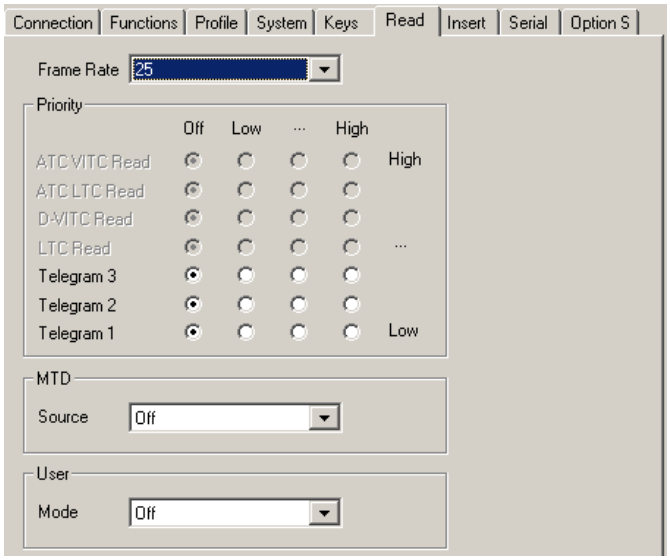

Application: Read serial interface time code and visibly insert it in a video window:

For this application we recommend to select “Read” as a source for the video window. Thus the non-interpolated read time code will be inserted.

Application: Convert serial interface time code:

Conversion of a serial interface time code to a continuous LTC/(D)VITC/ATC (depending on the module’s type and configuration) needs to activate a suitable Jam Sync function. In this case the synchronization between the devices involved has to be considered. If all devices use the same sync source (e.g. a black-burst video signal), the function "Continuous" or "Cont. 1 Frame" or "Cont. Wheel" should be selected. If no synchronization is possible and time code dropouts are to be expected, try one of the "Diff" or "Cont. Wheel" functions. If the regenerated time code is to be visibly inserted, "Generate" should be selected as source for the video window.

The following setup for the four programmable light emitting diodes enables a fast and easy verification:

	LED	Function	Description
	OPER	OPER	Module is operating.
	SIGNAL	SIGNAL	LED lights up if a serial interface time code is being read.
	SET	Jam	LED lights up if read values are being accepted during a continuous Jam Sync function. LED flashes slowly if no read values are being accepted during a continuous Jam Sync function. LED flashes fast as long as a SINGLE JAM is active. LED is off when the Jam Sync is turned off.
	ERROR	ERROR	LED lights up shortly during a reading error, e.g. if a serial interface time code has been detected to fail the continuous up-counting order.

4 The VDCP Protocol

Select the “Video Disk Control Protocol” (VDCP) utilizing the “Serial” function with one of the configuration tools:

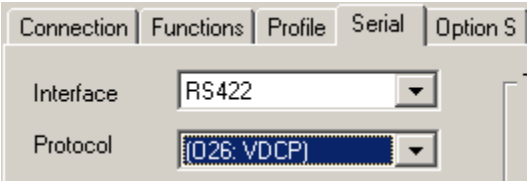

4.1 Choosing an Operating Mode

Select the operating mode utilizing the “Option S” function with one of the configuration tools:

Mode: **Off**
Slave – not provided for the VDCP application
Monitor
Record – not provided for the VDCP application
Master

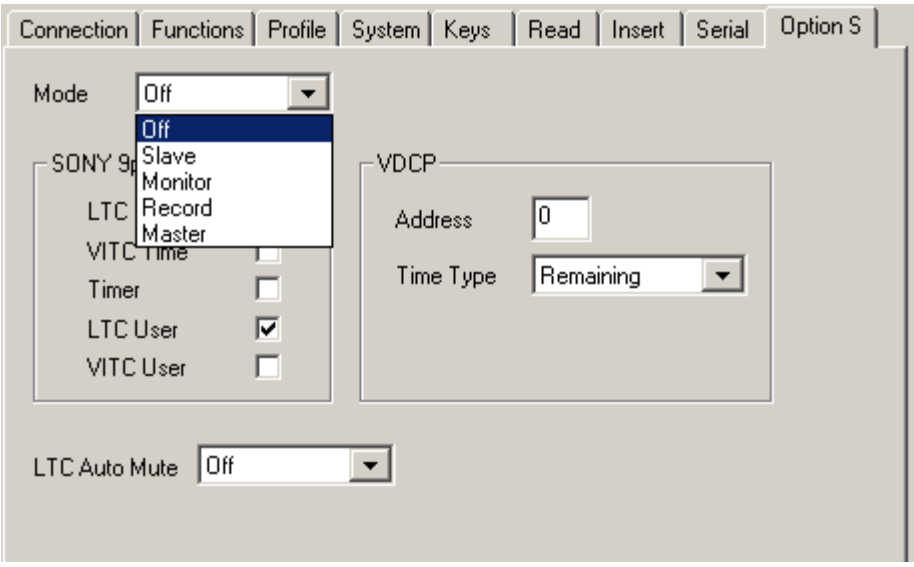

In the mode of operation “**Monitor**” the type of the time code to be accepted by the module can be selected.

In the mode of operation “**Master**” the type of the time code to be requested by the module can be selected.

4.2 Operating Mode MONITOR

A serial interface time code is read, converted into an LTC/(D)VITC/ATC (depending on the module’s type and configuration), and can also be visibly inserted in a video window.

The Rubidium module monitors an existing connection between a "controller" (MASTER) and a "controlled device" (SLAVE). The serial interface is set only to receive data. It receives the data transmitted from the "controlled device" (SLAVE). Use the connector cable shown at chapter “Operating Mode MONITOR Connecting”.

The VDCP protocol uses unit addresses. You have to choose the correct **address** of the device which returns the time code.

There may be different time codes (position data) returned. Please select at **Time Type** the kind of time code you want to read. If you are not sure about it try “Don’t Care” first.

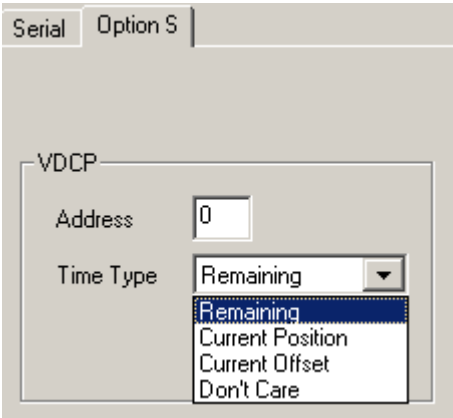

The following time code returns are relevant in this mode of operation:

3X.86	Return Data of Position Request

The read time code values automatically will be transferred to the "general" reader (READ) values as well.

Selecting the MONITOR mode will deactivate all other time code readers for the READ function. The frame rate is adjusted to the generator’s frame rate.

Example:

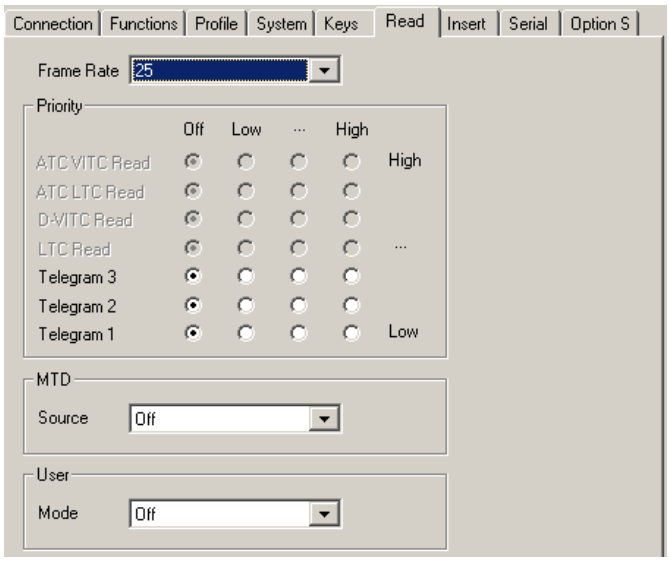

Application: Read serial interface time code and visibly insert it in a video window:

For this application we recommend to select “Read” as a source for the video window. Thus the non-interpolated read time code will be inserted.

Application: Convert serial interface time code:

Conversion of a serial interface time code to a continuous LTC/(D)VITC/ATC (depending on the module’s type and configuration) needs to activate a suitable Jam Sync function. In this case the synchronization between the devices involved has to be considered. If all devices use the same sync source (e.g. a black-burst video signal), the function "Continuous" or "Cont. 1 Frame" or "Cont. Wheel" should be selected. If no synchronization is possible and time code dropouts are to be expected, try one of the "Diff" or "Cont. Wheel" functions. If the regenerated time code is to be visibly inserted, "Generate" should be selected as source for the video window.

The following setup for the four programmable light emitting diodes enables a fast and easy verification:

	LED	Function	Description
	OPER	OPER	Module is operating.
	SIGNAL	SIGNAL	LED lights up if a serial interface time code is being read.
	SET	Jam	LED lights up if read values are being accepted during a continuous Jam Sync function. LED flashes slowly if no read values are being accepted during a continuous Jam Sync function. LED flashes fast as long as a SINGLE JAM is active. LED is off when the Jam Sync is turned off.
	ERROR	ERROR	LED lights up shortly during a reading error, e.g. if a serial interface time code has been detected to fail the continuous up-counting order.

4.3 Operating Mode MASTER

A serial interface time code is read, converted into an LTC/(D)VITC/ATC (depending on the module’s type and configuration), and can also be visibly inserted in a video window. The Rubidium module acts as a "controller" (MASTER). Synchronized to the generated time code the module sends time code inquiries that are answered by a "controlled device" (SLAVE). Use the connector cable shown at chapter “Operating Mode MASTER Connecting”.

The VDCP protocol uses unit addresses. You have to choose the correct **address** of the device which should return the time code.

Different types of time codes (position data) can be requested. Please select at **Time Type** the kind of time code you want to read. In this case you should not select “Don’t Care”.

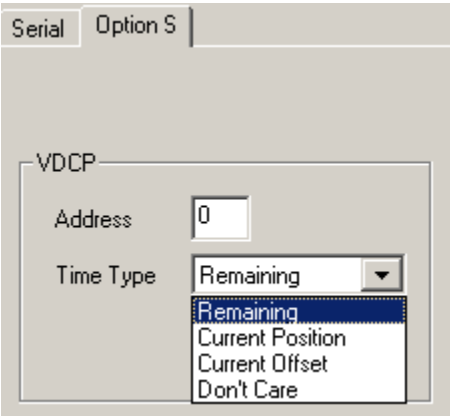

The following command will be sent frequently (every frame):

3X.06	Position Request

The time code values of the return are automatically set into the "general" reader (READ). Selecting the MASTER mode will deactivate all other time code readers for the READ function. The frame rate is adjusted to the generator’s frame rate. Example:	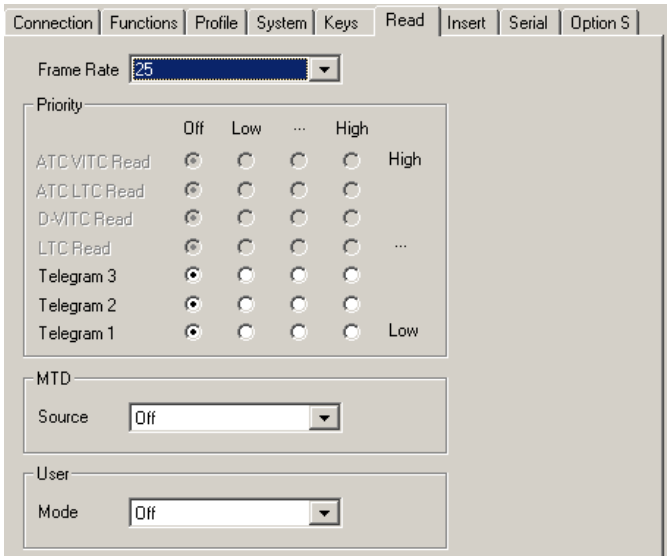

Application: Read serial interface time code and visibly insert it in a video window:

For this application we recommend to select “Read” as a source for the video window. Thus the non-interpolated read time code will be inserted.

Application: Convert serial interface time code:

Conversion of a serial interface time code to a continuous LTC/(D)VITC/ATC (depending on the module’s type and configuration) needs to activate a suitable Jam Sync function. In this case the synchronization between the devices involved has to be considered. If all devices use the same sync source (e.g. a black-burst video signal), the function "Continuous" or "Cont. 1 Frame" or "Cont. Wheel" should be selected. If no synchronization is possible and time code dropouts are to be expected, try one of the "Diff" or "Cont. Wheel" functions. If the regenerated time code is to be visibly inserted, "Generate" should be selected as source for the video window.

The following setup for the four programmable light emitting diodes enables a fast and easy verification:

	LED	Function	Description
	OPER	OPER	Module is operating.
	SIGNAL	SIGNAL	LED lights up if a serial interface time code is being read.
	SET	Jam	LED lights up if read values are being accepted during a continuous Jam Sync function. LED flashes slowly if no read values are being accepted during a continuous Jam Sync function. LED flashes fast as long as a SINGLE JAM is active. LED is off when the Jam Sync is turned off.
	ERROR	ERROR	LED lights up shortly during a reading error, e.g. if a serial interface time code has been detected to fail the continuous up-counting order.

5 Useful Time Code Functions

5.1 The Jam Sync Functions Overview

Useful Jam Sync functions are available with this option “S”. Select one of the available features with the “Jam” function utilizing one of the configuration tools:

Mode: **Off**
Continuous
Cont. 1 Frame
Cont. Wheel
Start
Convert
Diff Cont.
Diff Stop
Zero Frame

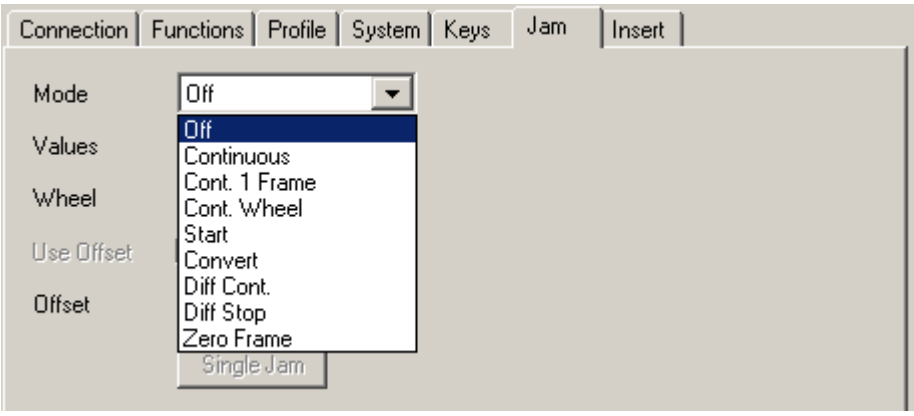

5.2 Jam Sync: Function “Converter“

Selection (see above): Mode = **Convert**.

In all other Jam Sync operating modes, the generator reads the time code time and only accepts it if the time is plausible and in an ascending continuous order. But with this "converter" function all read values including standing or even non-continuous values directly and exactly will be converted into the requested time code format. If no time code is read, the generator stops.

A time code, which is badly readable or incomplete, will pass these disturbances to the outputted time code.

Example for this application: VITC-to-LTC converter. The VITC of a frozen (still) image or during a single step motion is directly transferred to the generated LTC.

5.3 Jam Sync: Function “Difference“

Selection (see above): Mode = **Diff Cont.** or **Diff Stop**.

Although the Jam Sync function examines the read time values for plausibility and ascending order, it cannot in all cases be prevented that the generated time code has frame jumps. For example now and then a frame jump occurs if read time code and generated time code are not synchronized to each other. Nevertheless selecting the Jam Sync function **Diff Cont.** or **Diff Stop** a clean regeneration can be achieved.

In this mode new read time values to be transferred to the generator have to be up-counting. A “reverse” or “still” time code will be ignored. The generator however only synchronizes to the read time values if the time difference between reader and generator time exceeds an adjustable threshold. The “Diff Cont.” and the “Diff Stop” mode differ in case no reader values are being transferred: At “Diff Cont.” the generator continues to count the time on its own (continuous Jam Sync without flywheel option), at “Diff Stop” the generator stops counting after a programmed number of frames (“Wheel”).

This procedure sets the generator time equal to the read time at the beginning - for example with the start of a video tape. After that dropouts or phase shifting will not lead to a discontinuous time code output. Each time, if – for example after stopping and restarting the tape - again a difference of ≥ threshold occurs, the generator is automatically locked to this new read time code.

This function uses the value of the flywheel (“Wheel”) as the threshold for the difference. The allowed range of values is 2 - 20 frames. If the current value does not lie within this range the threshold will automatically be set to 4 frames.

Please notice the following remarks concerning this procedure and the choice of the threshold:

If a time difference greater than the threshold has been detected, the generator accepts the reader values for the next two seconds to get in sync. During this period the incoming time code should stabilize (for example a recorder should reach the normal play speed). If during this period no synchronization has been reached, the generated values compared to the incoming time code now can have any difference up to the threshold value.

If there is no synchronization between the incoming time code and the generated time code, a continuous drift against each other will take place and a time difference will built up. If the difference exceeds the threshold, a "hard" correction takes place. With the "Continuous" Jam Sync function you would have quiet often a one frame jump in this case, with the "Diff" Jam Sync function you would have seldom a jump of the size of the threshold. The more briefly however you choose the production time, the more highly the probability for an error free regeneration, because the difference will not reach the threshold.

5.4 LTC Output Automatically Set to “Mute”

In some applications it is requested that the time code output behaves like a tape machine, which has no audio signal when stopped - and therefore also no LTC signal. In this case the LTC output can switch off automatically.
Select this feature with the “Option S” function utilizing one of the configuration tools:

LTC Auto Mute: **Off**
Generate
Jam

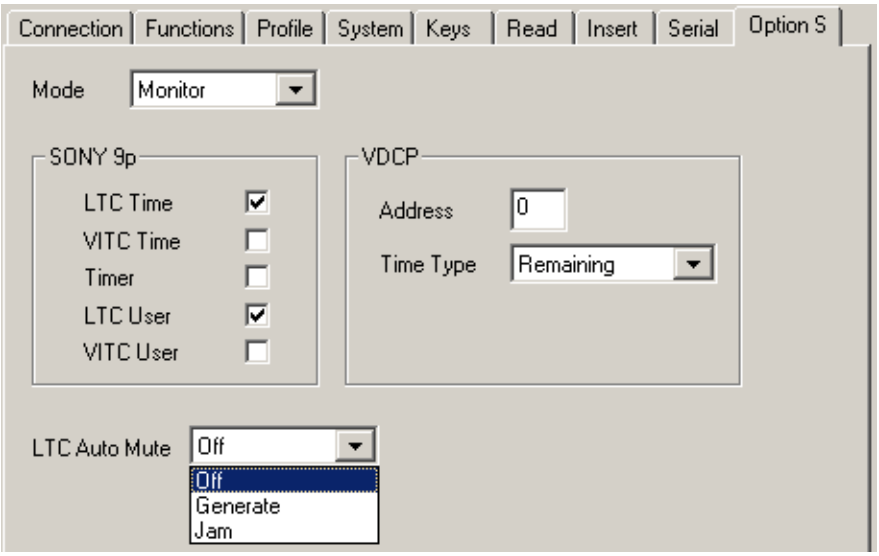

LTC Auto Mute = **Off**: The LTC output is always active, even with a still time.

LTC Auto Mute = **Generate**: The LTC output is turned off when no new values are generated.

LTC Auto Mute = **Jam**: The LTC output is turned off when during a Jam Sync no new values are being read.

The difference between the selection **Generate** and **Jam** becomes clear when you look at the different Jam Sync functions. If time code is being read, the LTC output is always active. If **no** time code or "**still values**" of a time code is being read, the LTC output behaves according to the following table:

Jam Sync function	LTC Auto Mute = **Generate**	LTC Auto Mute = **Jam**
Continuous	active	muted
Cont. 1 Frame or Cont. Wheel	muted – at the end of the flywheel operation	muted
Start (start up phase, until first time code takeover)	active	muted
Conversion + no time code	muted	muted
Conversion + "standing" time code	muted	active

Difference	active	muted