plura

TIMING SOLUTIONS

Rubidium Series

# RUB G3

# IEEE1588/PTP Module with integrated GPS/GLONASS/Galileo/QZSS Satellite Receiver and Reference Frequency Outputs for Synchronisation Tasks

Functional Description and Specifications
Supplement to the “Installation & Systems Manual RUBIDIUM SERIES”
Version: 1.1
January 11, 2024

# CONTENTS

A1 REVISION HISTORY

A2 COPYRIGHT

A3 GENERAL REMARKS

**1 INTRODUCING G3 7**

1.1 OVERVIEW 7

1.2 REAR PANEL AND CONNECTIONS 9

1.3 JUMPERS 10

1.4 SPECIFICATIONS 11

1.5 FEATURES 14

1.5.1 Block Diagram 14
1.5.2 PTP Engine 14
1.5.3 GNSS Receiver 15
1.5.4 Time & Date Output 16
1.5.5 Reference Frequency Output 17
1.5.6 Time & Date Input 17

1.6 PTP OPERATING MODES 18

1.6.1 PTP Slave 18
1.6.2 PTP Grandmaster 18
1.6.3 PTP Grandmaster with PTP fallback 18
1.6.4 PTP Boundary Clock 18
1.6.5 PTP Boundary Clock with GPS 18

1.7 SOFTWARE UPDATE 19

1.8 LICENSE CHANGE 20

**2 INSTALLATION 21**

2.1 CHOICE OF ANTENNA 21

2.1.1 Pole Mount GNSS Antenna with Integrated Lighting Protection 21
2.1.2 Low Profile GNSS Timing Antenna 22

2.2 ANTENNA INSTALLATION 22

2.3 THE ANTENNA CABLE 23

2.4 RUB G3-2: DOUBLE GNSS RECEIVER ASSEMBLY 25

**3 APPLICATIONS 26**

3.1 PTP SLAVE 26

3.2 PTP GRANDMASTER WITH GNSS RECEIVER 27

3.3 PTP GRANDMASTER WITH DOUBLE GNSS RECEIVERS 28

3.4 REDUNDANT PTP GRANDMASTER WITH SINGLE GNSS RECEIVER 29

3.5 FULLY REDUNDANT PTP GRANDMASTER WITH GNSS RECEIVERS 30

| | | |
|---|---|---|
| **4** | **STATUS MONITOR** | **32** |
| 4.1 | STATUS MONITOR BY THE ETHERNET MODULE | 32 |
| 4.2 | STATUS MONITOR BY A PC PROGRAM | 33 |
| 4.3 | STATUS: PTP | 34 |
| 4.4 | STATUS: GNSS RECEIVER | 36 |
| 4.5 | STATUS: METADATA | 37 |
| 4.6 | STATUS OF FAN AND POWER SUPPLIES | 38 |
| **5** | **THE RUBIDIUM CONFIGURATION TOOLS** | **39** |
| 5.1 | THE RUBIDIUM CONFIGURATION PC PROGRAM | 39 |
| 5.2 | THE RUBIDIUM SERIES HTTP SERVER | 40 |
| 5.3 | “FUNCTIONS“: FUNCTIONS OF THE MODULE | 41 |
| 5.4 | “KEYS“: KEYS AND LAMPS, LEDS AND GPI | 42 |
| 5.5 | “PTP“: OPERATING PARAMETERS OF SYNCHRONIZATION | 44 |
| 5.6 | “OUTPUT“: SERIAL INTERFACE, PPS AND 10 MHZ OUTPUTS | 46 |
| 5.7 | “LEAP SECONDS“: SETTING THE LEAP SECONDS | 48 |
| 5.8 | “METADATA“: SMPTE SYNCHRONIZATION METADATA | 50 |
| 5.9 | “REFERENCE“: PTP REAL-TIME REFERENCE INPUT | 51 |
| 5.10 | “LINK”: COMMUNICATION BETWEEN MODULES | 52 |
| 5.11 | “SYSTEM“: NAME, BOOT, INFO, FAN, IP, SNMP | 53 |

# A1 Revision History

| No. | Date | Subject |
|---|---|---|
| 0.n | | Preliminary documents, changes without notice. |
| 1.0 | June 1, 2023 | First released document. |
| 1.1 | January 11, 2024 | Updated download links and update instructions. |

Due to constant product development the features of this module are subject to change. The current functional description always refers to the current software and the current configuration tool.

You can download the latest version of the standard software from

https://plurainc.com/products/g3/

Please be sure to use the latest configuration program after having done an update. You can download the latest version from the address above.

# A2 Copyright

Copyright © Plura Europe GmbH 2020-2024. All rights reserved. No part of this publication may be reproduced, translated into another language, stored in a retrieval system, or transmitted, in any form or by any means, electronic, mechanical, photocopying, recording, or otherwise without the prior written consent of Plura Europe GmbH.

Printed in Germany.

Technical changes are reserved.

All brand and product names mentioned herein are used for identification purposes only and are trademarks or registered trademarks of their respective holders.

Information in this publication replaces all previously published information. Plura Europe GmbH assumes no responsibility for errors or omissions. Neither is any liability assumed for damages resulting from the use of the information contained herein.

For further information please contact your local dealer or:

Plura Europe GmbH
Binger Weg 12
D- 55437 Ockenheim
Phone: +49 6725 918 006-70
Fax: +49 6725 918 006-77
E-Mail: info@plurainc.com
Internet: http://www.plurainc.com

# A3 General Remarks

This manual is a supplement to the '*Installation & Systems Manual RUBIDIUM SERIES*'. Please read the below listed chapters of the '*Installation & Systems Manual RUBIDIUM SERIES*', as these chapters are necessary for the safe and proper use of RUB modules:

- *A3 Warranty,*
- *A4 Unpacking/Shipping/Repackaging Information,*
- *A5 Safety Instructions,*
- *A6 Certifications & Compliances,*
- *Plug-In a Module,*
- *Remove a Module.*

# 1 Introducing G3

## 1.1 Overview

The G3 module is a highly reliable IEEE1588 PTP grandmaster or slave with integrated multi-GNNS receiver and master clock.

The PTP engine can work in grandmaster or slave operating modes that can be selected by module's configuration. In grandmaster mode G3 accepts real-time from the internal GNSS receiver or from external sources. It needs a precise PPS (pulse per second) input and serial time & date protocol. Then it acts as an IEEE1588-2008 (PTP version 2) grandmaster clock.

In PTP slave mode G3 accepts signals from IEEE1588-2008 (PTP version 2) grandmaster clocks. Accurate time is provided by a precise PPS (pulse per second) output and serial time & date protocols.

The built-in GNSS receiver accepts signals worldwide from GPS (US system), from GLONASS (Russian system), from Galileo (European system), as well as from QZSS (Japanese system), and from the satellite-based augmentation systems (SBAS) WAAS, EGNOS, and MSAS.

Various GNSS or PTP disciplined frequency outputs are available, 10 MHz sine waves and programmable square waves.

The G3 module's versatility makes it ideally suited for time and frequency synchronisation tasks, such as time and frequency reference in broadcast facilities, e.g. to slave video sync and time code generators.

A **PC** or one of the RUB Ethernet modules (**RUB IE** or **RUB PM**) is required for set-up.

**G3** is provided for the RUB1 system (19", 1 RU). A button on the front panel visibly identifies this module. The serial number is located on the bottom side of the printed circuit board.

Overview of the most important module-specific functions:

- PTP engine: IEEE1588-2008 (PTP version 2) grandmaster or slave clock.
- Multi-GNSS receiver: GPS (US system), GLONASS (Russian system), Galileo (European system), QZSS (Japanese system), satellite-based augmentation systems (SBAS) WAAS, EGNOS, and MSAS.
- Precision timekeeping via TCXO or high stability OCXO (option).
- GNSS or PTP disciplined frequency outputs: 10 MHz sine waves, PPS (pulse per second).
- RS232 communication ports for time & date and status output.
- PPS and time & date inputs in PTP grandmaster mode.
- Four programmable function keys, lamps and LEDs on the front panel.
- Optional: IRIG-B output.

Overview of the most important functions within a RUBIDIUM system:

- "Hot Swapping", i.e. it is possible to insert or remove a module without interrupting the operation of other modules in this frame.
- Alarm feature via failure relay: contacts of the relay connected to the FAIL_A and FAIL_B pins of the **RLC** connector at the rear of the frame.
- RS232 and TC_link interfaces to have access to the internal bus of the chassis:
  - RS232 enables access to the module via USB using the RS232/USB converter of the chassis. The PC programs "Rubidium Config" (configuration) and "RubStatSE" (status monitor) are provided for this interface.
  - TC_link will be connected to the RLC DSUB of the chassis. This interface enables, on the one hand, communication to modules located in different chassis and, on the other hand, access to the module via internet browser – provided any RUB Ethernet module (**RUB IE** or **RUB PM**) is part of the system. Via internet browser it is possible to open the configuration pages as well as the status monitor.
- Flash memory containing the firmware, so updates are possible via USB. You can download the latest version of the program from: https://plurainc.com/products/g3/.
- SNMP functionality if any RUB Ethernet module (**RUB IE** or **RUB PM**) with SNMP option is part of the system.

## 1.2 Rear Panel and Connections

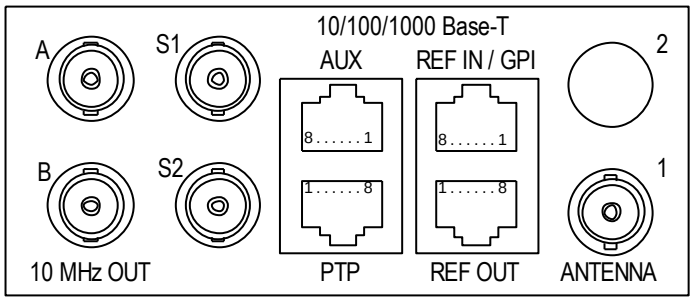


| | REF IN / GPI<br>RJ45 | | REF OUT<br>RJ45 |
|---|---|---|---|
| 1 | PPS IN | 1 | PPS OUT |
| 2 | RxD (RS232 IN) | 2 | TxD (RS232 OUT) |
| 3 | GPI_1 | 3 | n. c. (optional: PPS_2 OUT) |
| 4 | GND | 4 | GND |
| 5 | +24V / 200mA | 5 | n. c. (optional: IRIG-B OUT) |
| 6 | GPI_2 | 6 | n. c. (optional: 10 MHz sine wave output) |
| 7 | GPI_3 | 7 | n. c. (optional: PPS_RS422_A) |
| 8 | GPI_4 | 8 | n. c. (optional: PPS_RS422_B) |

| | |
|---|---|
| **10 MHz OUT** | 2 x BNC 75 Ω (optional 50 Ω). 10 MHz sine wave outputs, 1 $V_{PP}$. |
| **S1, S2** | 2 x BNC. Programmable square wave outputs, 4 $V_{PP}$. |
| **PTP** | 10/100/1000 Base-T, accepting or sending IEEE 1588-2008 (PTP version 2) timestamps. |
| **AUX** | 10/100/1000 Base-T, programmable Ethernet functions. |
| **ANTENNA 1** | BNC 50 Ω. Active GNNS antenna input, 4V DC power supply. |
| **ANTENNA 2** | BNC 50 Ω. Active GNNS antenna input of 2nd receiver (optional), 4V DC power supply. |

## 1.3 Jumpers

Optional signals on RJ45 **REF OUT** connector can be enabled by jumpers, as well as output impedance of both BNC 10MHz OUT signals can be changed.

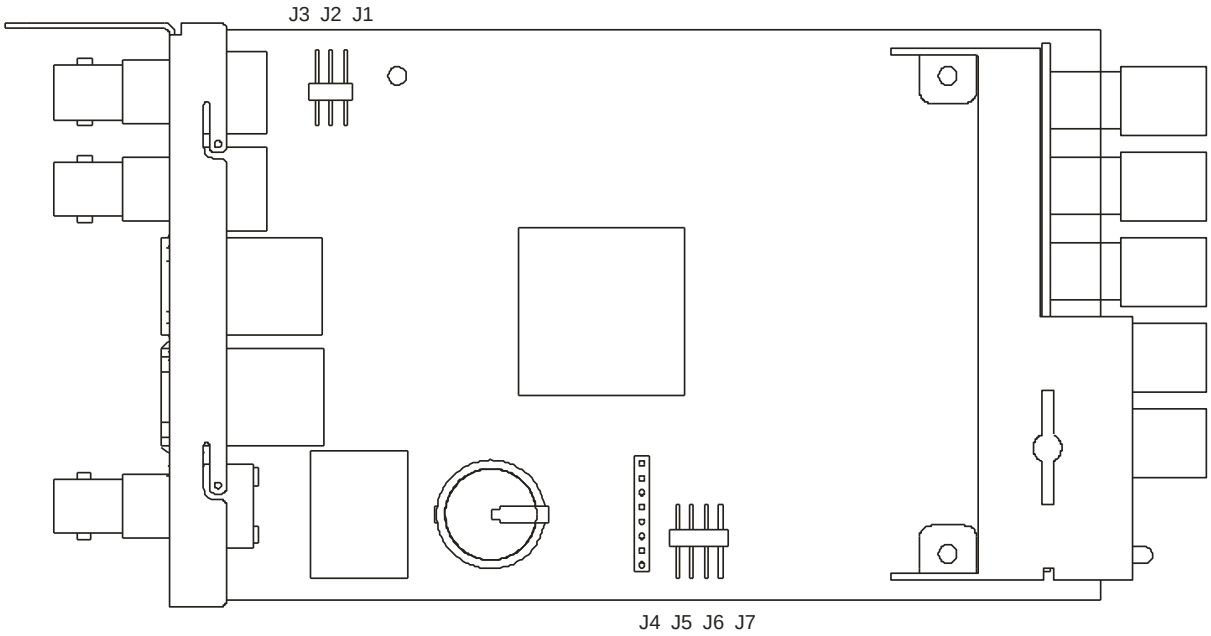


| **Jumper** | |
|---|---|
| J1 | Enables signal on RJ45 **REF OUT** pin 6 (10 MHz sine wave output). |
| J2 | Switches 10 MHz OUT "A" to 50 Ω impedance. |
| J3 | Switches 10 MHz OUT "B" to 50 Ω impedance. |
| J4 | Enables signal on RJ45 **REF OUT** pin 7 (PPS_RS422_A). |
| J5 | Enables signal on RJ45 **REF OUT** pin 8 (PPS_RS422_B). |
| J6 | Enables signal on RJ45 **REF OUT** pin 3 (PPS_2 OUT). |
| J7 | Enables signal on RJ45 **REF OUT** pin 5 (IRIG-B OUT). |

## 1.4 Specifications

PTP Grandmaster

| | |
|---|---|
| Standards | IEEE 1588-2008 (PTP version 2)<br>SMPTE ST 2059-2:2015 |
| Delay mechanism | One-step or two-step |
| Output sync rate | Up to 8 sync packets per second |
| Message rates | Up to 128 packets per second |
| Capacity | Multicast: Only limited by Ethernet Bandwidth<br>Unicast: Up to 128 slaves (optional: Up to 256 slaves) |
| Reference time & date protocol | NMEA, 2400 bps, 8N1 or Meinberg Std/GPS protocols, 2400, 4800 or 9600 bps, data bits and parity selectable |

PTP Slave

| | |
|---|---|
| Standards | IEEE 1588-2008 (PTP version 2)<br>SMPTE ST 2059-2:2015 |
| Frequency alignment | Better than $\pm 10 \cdot 10^{-9}$ on a managed 10-switch GbE network under G.8261 test conditions |
| Time Alignment | Better than ±1µs accuracy on a managed 10-switch GbE network under G.8261 testing conditions |
| Delay mechanism | One-step or two-step |
| Input sync rate | Up to 128 sync packets per second |

GNSS Receiver

| | | | |
|---|---|---|---|
| Receiver type | 50-channel u-blox 8 engine<br>GPS/QZSS L1 C/A<br>GLONASS L1 FDMA<br>SBAS: WAAS, EGNOS, MDAS | | |
| Dynamic platform model | Stationary (antenna must be stationary) | | |
| Time-to-first-fix (typical) | | GPS | GLONASS |
| | Cold start | 29 s | 36 s |
| | Warm start | 28 s | 25 s |
| | Hot start | 1 s | 2 s |
| Sensitivity | | GPS | GLONASS |
| | Tracking & Navigation | -162 dBm | -158 dBm |
| | Cold start | -148 dBm | -138 dBm |
| | Warm start | -148 dBm | -145 dBm |
| | Hot start | -155 dBm | -153 dBm |
| Navigation update rate | | GPS | GLONASS |
| | | 2 Hz | 2 Hz |
| Horizontal position accuracy | | GPS | GLONASS |
| | | 2.5 m | 4 m |

Antenna requirements

| | |
|---|---|
| Antenna type | Active timing antenna |
| Operating voltage | 4 VDC, or range $V_{MIN}$–$V_{MAX}$ with $V_{MIN} \leq 4$ V and $V_{MAX} \geq 4$ V |
| Operating current | ≤ 50 mA |
| Gain minimum/maximum | 15 dB / 50 dB |
| Total noise figure | < 3 dB |
| Frequency band covering | 1575–1606 MHz, if GLONASS reception required |
| ⚠ | Do not connect or disconnect the antenna when the module is powered! |

Accuracy of the frequency outputs

| Oscillator | | TCXO (standard) | OCXO (option) |
|---|---|---|---|
| Warm-up time | | n/a | 1 – 2 minutes |
| Short term stability (τ = 1s) | | | $\pm 1 \cdot 10^{-9}$ |
| Stability vs. temperature (over specified range of environmental temperature) | | $\pm 1 \cdot 10^{-6}$ | $\pm 1 \cdot 10^{-7}$ |
| Oscillator aging | per day | | $\pm 1 \cdot 10^{-8}$ |
| | per year | $\pm 1 \cdot 10^{-6}$ | $\pm 3 \cdot 10^{-7}$ |

10 MHz Continuous Wave (sine wave output)

| Oscillator | | TCXO (standard) | OCXO (option) |
|---|---|---|---|
| Phase noise | 1 Hz | | < -67 dBc/Hz |
| | 10 Hz | | < -100 dBc/Hz |
| | 100 Hz | | < -130 dBc/Hz |
| | 1 kHz | | < -148 dBc/Hz |
| | 10 kHz | | < -154 dBc/Hz |
| Level at BNC 75 Ω | | 1 $V_{PP}$ @ 75 Ω (±10 %) | [optional by jumper: 50 Ω] |
| Level at RJ45 REF OUT | | 1 $V_{PP}$ @ 75 Ω (±10 %) | [optional by jumper: pin 6] |

PPS (output)

| | |
|---|---|
| Connector | RJ45 REF OUT, pin 1<br>Optional: RJ45 REF OUT, pin 3 |
| Pulse width (active high) | Adjustable: 0.25 / 1.0 / 10 / 100 / 250 ms |
| Output characteristics | Output impedance: 50 Ω<br>Signal level: 5.0 V ±2 % (no load)<br>4.5 V ±2 % @ 600 Ω<br>2.1 V ±2 % @ 50 Ω<br>Slew rate (rising edge): > 200 V/µs |
| Accuracy | Refer to “Accuracy of the frequency outputs“ |

GPI

| | |
|---|---|
| Connector | RJ45 REF IN / GPI, Pins 3, 6, 7, 8 |
| Input specification | Input "Low": -8.0 to +0.5 V<br>Input "High": +1.9 to +15.0 V<br>Impedance: ≥ 10 kΩ |
| Output specification | Open Collector output of an NPN transistor at 10 kΩ pull-up resistor. Maximum power dissipation: 200 mW.<br>"High" state: 3.8 V (no load).<br>"Low" state: output switched to GND.<br>Max. collector current: 100 mA DC, fused by a 100 mA auto-recovery fuse.<br>Collector-emitter saturation voltage:<br>@100 mA: typ. 300 mV (≤ 1 V)<br>@10 mA: typ. 100 mV (≤ 250 mV) |

Serial Interface: TxD

| | |
|---|---|
| Electrical format | RS232 |
| Parameters | Baud rate: 2400, 4800, 9600, 19200, 38400<br>Data bits: 7, 8<br>Parity: none, even, odd<br>Stop bits: 1, 2 |
| TxD features | UTC time & date output once per second. |

RTC: Buffered Real-Time Clock

| | |
|---|---|
| Kind of buffering and buffering time | Capacitor; ≥ 7 days typical |
| Accuracy of clock | ±2.0 ppm over +5 °C to +40 °C [173 ms per day]<br>±3.5 ppm over -10 °C to +60 °C |
| RTC features | Sets time & date of the internal clock after warm-up if no other time & date source is available. |

Electrical, Mechanical, and Environmental Characteristics

| | | | |
|---|---|---|---|
| Power consumption | 2.0 W typical during normal operation<br>5.1 W maximum during warm-up [with option OCXO]<br>3.5 W typical during normal operation [with option OCXO] | | |
| Weight | ≈ 0.25 kg | | |
| Dimensions | Circuit board: 100 (W) x 160 (D) mm<br>RUB1 rear panel: 103 x 44 mm / 4.06 x 1.73 inch | | |
| Environmental | | Operating | Non-operating |
| | Temperature: | +5 °C to +40 °C | -10 °C to +60 °C |
| | Relative humidity: (non-condensing) | 30 % to 85 % | 5 % to 95 % |

# 1.5 Features

## 1.5.1 Block Diagram

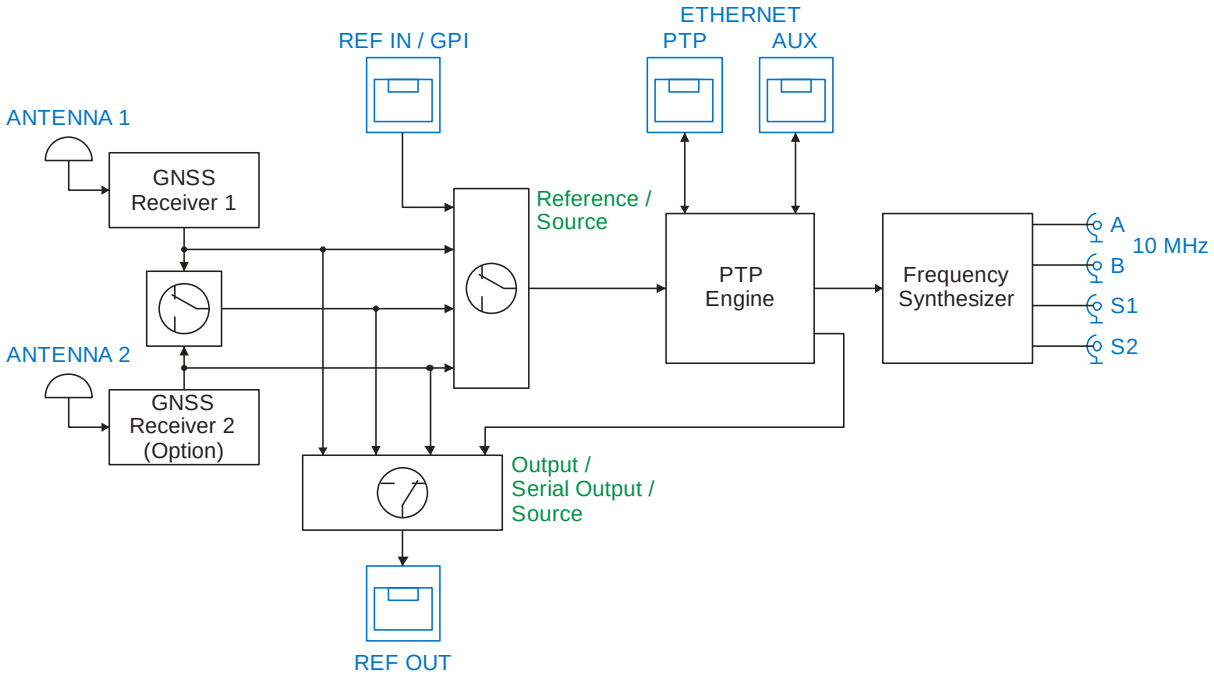


## 1.5.2 PTP Engine

The “Precision time Protocol” (PTP) is standardized in IEEE 1588-2008. Its use in broadcast applications is specified in SMPTE 2059-2:2015 “Profile for Use of IEEE-1588 Precision Time Protocol in Professional Broadcast Applications”.

The G3 module in PTP slave mode uses PTP as a timing reference by synchronizing to a PTP grandmaster in the local network. The PTP engine converts these signals to UTC (Universal Time Coordinated) uses it to set and synchronize the internal clock of the G3 module. A high-precision oscillator, either a temperature compensated oscillator (TCXO) or optionally an oven-controlled oscillator (OCXO), is the fundamental part of the internal clock. Its frequency will be disciplined continuously by the PTP grandmaster, thus compensating the aging of the oscillator.

The G3 module in PTP grandmaster mode uses its internal GNSS receiver or external time & date as a timing reference. The PTP grandmaster interprets these signals as UTC (Universal Time Coordinated) and uses it to set and synchronize the internal clock of the G3 module and is used to provide PTP grandmaster functionality.

PTP operating modes are described in chapter 1.6.

### 1.5.3 GNSS Receiver

The term "Global Navigation Satellite System" (GNSS) combines the satellite navigation systems, as there are GPS (US system), GLONASS (Russian system), Galileo (European system), as well as QZSS (Japanese system), and satellite-based augmentation systems (SBAS) WAAS, EGNOS, and MSAS. The G3 module uses a receiver which is able to receive and evaluate signals from all the mentioned systems, provided an appropriate antenna is connected.

The receiver is capable of receiving multiple satellites in parallel, even from different satellite systems. GPS, GLONASS and Galileo satellites are not stationary but circle round the globe, thus the number of satellites in view varies. The antenna must be installed outdoors where an unobstructed view of the sky exists.

The G3 module can use GNSS as a timing reference end/or output it to external equipment. The satellites carry an atomic clock on board. Each satellite periodically transmits a signal that includes its position, the time of the clock, and the unique identification code of the satellite. The receiver converts these signals to UTC (Universal Time Coordinated). This UTC sets and synchronizes the internal clock of the G3 module. A high-precision temperature compensated oscillator (TCXO) or optionally an oven-controlled oscillator (OCXO) is the fundamental part of the internal clock. Its frequency will be disciplined continuously by the atomic clocks of the satellites, thus compensating the aging of the oscillator.

Accuracy depends on many factors. Accuracy of time requires accuracy of position. The receiver has to use three satellites to reach a degraded navigation ("2D position fix"). Minimum four satellites must be available to calculate a complete solution including the height ("3D position fix"). As a rule of thumb, the position should be known with an accuracy of better than 1 m for a timing accuracy in the order of nanoseconds. Furthermore, accuracy depends on quality of the antenna and antenna cable, on satellite constellation and ionosphere activities. These factors let the accuracy vary with time. The G3 module performs long-term measurements, and with the aid of sophisticated algorithms the TCXO or OCXO will be synchronized in order to compensate the signal fluctuations of the receiver.

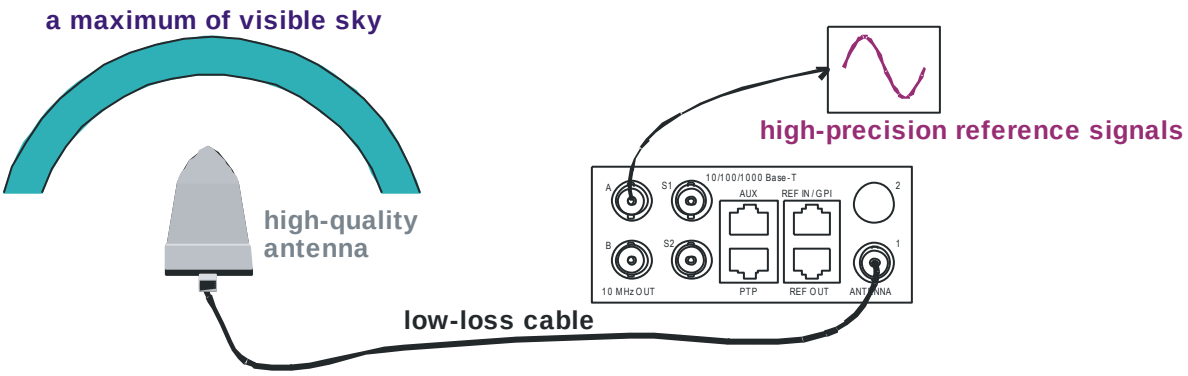

### 1.5.4 Time & Date Output

The G3 module outputs a precise pulse per second (PPS) together with an RS232 data string once per second. Both these signals are commonly used as the time & date reference for various applications.

PPS

The **leading edge** of the PPS OUT pulse always is defined to be the timing reference.
This pulse is available: at pin 1 of connector RJ45 **REF OUT** (= PPS OUT),
optionally at pin 3 of connector RJ45 **REF OUT** (= PPS_2 OUT),

The pulse width is adjustable to 0.25 / 1.0 / 10 / 100 / 250 ms.

Time, Date, and Status Information

There is a RS232 data string available containing time, date, and status information. Time & date corresponds to the **UTC** time zone. The data refers to the leading edge of the preceding PPS.
This data string is available at pin 2 of connector RJ45 **REF OUT** (= TxD).

The TxD output can be configured with respect to data protocol and serial interface parameters. For more information, please refer to chapter "Serial Interfaces: Programming the Serial Interfaces".

Example: PPS (yellow, active high, pulse width 10 ms) and TxD (blue, 9600 baud)

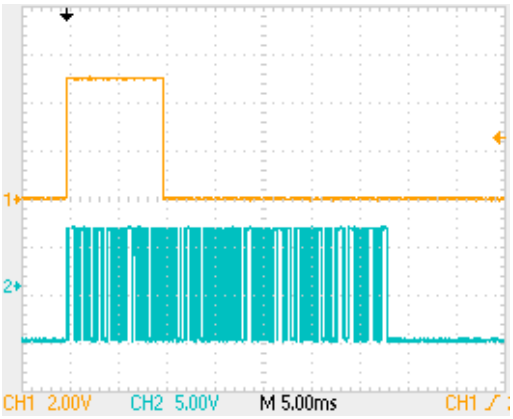

### 1.5.5 Reference Frequency Output

The G3 module outputs precise reference frequencies for various applications. These frequencies are derived from the internal 10 MHz TCXO (Temperature Compensated Crystal Oscillator), optionally a high stability OCXO (Oven Controlled Crystal Oscillator).

10 MHz Sine Wave

Available at 2 x BNC 75 Ω (optional 50 Ω). Level: 1 $V_{PP}$ @ 75 Ω (±10 %).
Optional available at connector RJ45 **REF OUT**, pin 6. Level: 1 $V_{PP}$ @ 75 Ω (±10 %).

Square Wave Signals

Available at BNC **S1** and **S2**.

Each output can receive an individual set-up:

PPS or 8 kHz or 1.544 / 10 / 19.44 / 20 / 25 MHz.

Duty cycle of each frequency except PPS: 50/50 % (±1 %).

### 1.5.6 Time & Date Input

In grandmaster mode the G3 module needs an external time & date reference. It consists of a precise pulse per second (PPS) and a RS232 data string once per second. Both these signals are commonly used as the time & date reference for various applications.

PPS

The **leading edge** of the PPS IN pulse is defined to be the timing reference. The pulse needs to be connected to pin 1 of connector RJ45 **REF IN / GPI** (= PPS IN).

Time, Date, and Status Information

This is a RS232 data string containing time, date, and status information. Time & date protocol, baud rate and format are selectable. NMEA protocol should be used at 4800 baud, 8 data bits, no parity and 1 stop bit. It shall correspond to the **UTC** time zone. The data refers to the leading edge of the preceding PPS. The data string needs to be connected to pin 2 of connector RJ45 **REF IN / GPI** (= RxD).

# 1.6 PTP Operating Modes

### 1.6.1 PTP Slave

In this mode the RUB G3 acts as a PTP slave only. If there is no PTP grandmaster on the network the clock will stay in the listening state waiting for the grandmaster to appear.

When RUB G3 is switched to this mode the engine changes the clock class to SLAVEONLY (255) and the clock accuracy to UNKNOWN (0xFE).

### 1.6.2 PTP Grandmaster

The RUB G3 is a grandmaster and the GPS is the only source of synchronization. It can never become a slave to another clock regardless of its clock class.

In this mode the clock class is automatically controlled by the engine. The clock is initialized with class DEFAULT (248) and as soon as the engine detects the presence of a stable GPS signal it raises the class to PRC_SYNC (6). If both PPS and TOD input signals are available, then the timescale is automatically switched to PTP and the clock class is PRC_SYNC (6).

If later the GPS-signal is lost the clock is switched to the holdover mode and lowers its class to PRC_HOLDOVER (7). If after the holdover period, the GPS-signal is still not available the clock downgrades its class PRC_DEGRADATION_A (52) and stays as the PTP grandmaster in the free-running mode. If a better clock exists on the network the clock will switch to the PTP passive state.

### 1.6.3 PTP Grandmaster with PTP fallback

This mode is almost the same as PTP grandmaster Mode above, but after the holdover interval the clock degrades its class to PRC_DEGRADATION_B (187), so it can potentially become a PTP slave if a better clock appears on the network.

It means that the clock has the GPS-signal as its primary source of synchronization and the PTP as a backup source, i.e. when no GPS-signal present.

### 1.6.4 PTP Boundary Clock

This is an ordinary PTP master-slave mode. The GPS interface is disabled. In this mode the RUB G3 acts as a PTP slave but may also become a PTP grandmaster if no better clock exists on the network.

The clock class is initialized to DEFAULT (248) and is not changed by the engine while operating.

### 1.6.5 PTP Boundary Clock with GPS

This mode is designed for unstable GPS-reception environments, where the node having a better signal reception becomes a PTP grandmaster and all others become PTP slaves, even if they have their own GPS-signal.

The clock is initialized with class DEFAULT (248) and the class is not changed by the engine while operating. Instead after detecting the stable GPS-signal the engine increases the priority2 member of the Default Dataset (lowers its value) by some small margin, which might depend on the reception quality. That clock which has a higher priority2 (better GPS signal reception) becomes the PTP grandmaster on the network and all others synchronize with it.

## 1.7 Software Update

Software updates require a (Windows operating system) computer and the "RUBIDIUM CONFIGURATION" program.

**Important:** Please make sure to always use the latest version of the program. You can download it from:

https://plurainc.com/products/g3/.

The computer requires an Ethernet interface (**G3** module and computer connected to the same network). When using a firewall, ensure that the computer can connect to the module on TCP ports 20, 21 and 23 and on UDP port 8001 for both incoming and outgoing traffic.

Current G3 module firmware – with all combinations of standard options – is available at the address above. Store your update file on your computer.

Now execute the following steps:

1. Be sure that **G3** module and computer are connected to the same network and that they can reach each other at the ports listed above. Disable any firewall that might block the **Rubidium Config** program.
2. Start the **Rubidium Config** program.
3. Choose "Ethernet Module Configuration…" from the "Tools" menu.
4. Press "Scan network" and choose the module from the list. The "Status" box now shows the current firmware version and installed options, as shown on the right.
5. Click the Browse ("…") button to search for the update file.
6. Press "Start Update".
7. The module reboots after flash update. A "Reboot complete" message appears. Press the "OK" button.
8. An "Update complete" message appears. Press the "OK" button. Update is finished now.

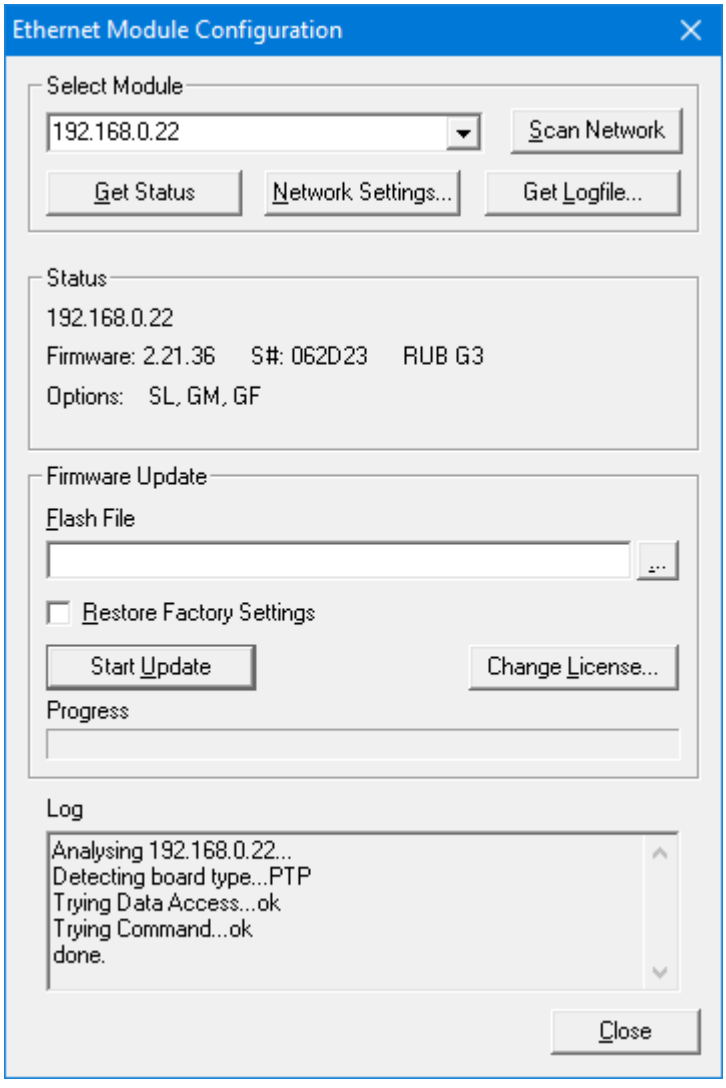


*During the flash update the operation of the module stops!*

## 1.8 License Change

Changing the license by entering an activation key allows enabling new functionality after purchasing. This requires a computer with the **Rubidium Config** program, and an Ethernet interface (**G3** module and computer connected to the same network). When using a firewall, ensure that the computer can connect to the module on TCP ports 20, 21 and 23 and on UDP port 8001 for both incoming and outgoing traffic.

Now execute the following steps:

1. Be sure that **G3** module and computer are connected to the same network and that they can reach each other at the ports listed above. Disable any firewall that might block the **Rubidium Config** program.

2. Start the **Rubidium Config** program.

3. Choose "Ethernet Module Configuration…" from the "Tools" menu.

4. Press "Scan network" and choose the module from the list. The "Status" box now shows the current firmware version and installed options.

5. Click the "Change License…" button.

6. Copy the "Serial Number" to the clipboard and paste it to an e-mail to sales@plurainc.com to purchase an activation key.

7. After purchasing you'll get an e-mail with the activation key. Copy it to the clipboard, paste it to the "Activation Code" field and click OK.

8. You'll get a response that the module options were successfully changed.

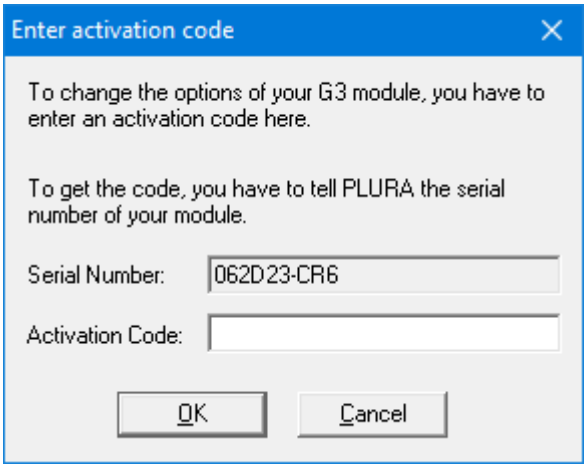


9. Now you can use the new functionality by changing G3's operating mode.

# 2 Installation

## 2.1 Choice of Antenna

Please notice chapter “Specifications” for antenna requirements. Below, two types of antennas will be described which have passed many tests and fulfil the requirement of multi GNSS reception as well as excellent performance.

### 2.1.1 Pole Mount GNSS Antenna with Integrated Lighting Protection

Product ordering: **ANTG**

Specifications

| | |
|---|---|
| Antenna type | GPSGL-TMG-SPI-40NCB |
| Operating voltage | 3.3–9.0 VDC |
| Operating current | < 40 mA |
| Amplifier gain | 40 dB ±4 dB @ GPS; 38 dB ±4 dB @ GLONASS |
| Frequency band | 1575.42 ±10 MHZ; 1602–1615 MHz |
| Temperature range | -40 °C to +85 °C |
| Antenna cable connector | N, female |

Mechanical

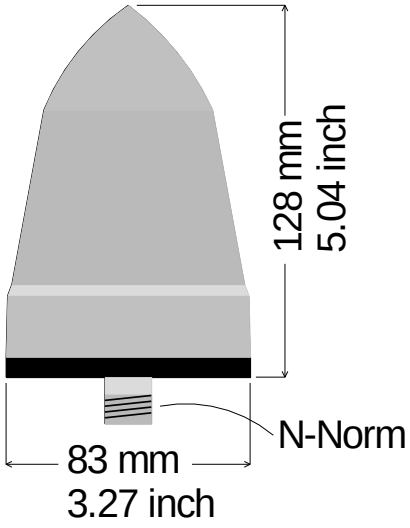

Gewindetiefe: 7 mm
Depth of thread: 0.28 inch

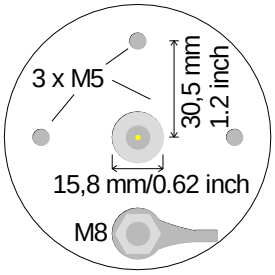

### 2.1.2 Low Profile GNSS Timing Antenna

Product ordering: **ANTGLP**

Specifications

| | |
|---|---|
| Antenna type | TW3440 |
| Operating voltage | 2.5–16 VDC |
| Operating current | 21 mA typical |
| Amplifier gain | ≥ 40 dB |
| Frequency band | 1575,42 to 1606 MHz |
| Temperature range | -40 °C to +85 °C |
| Antenna cable connector | TNC, female |

Mechanical [Dimensions in mm]

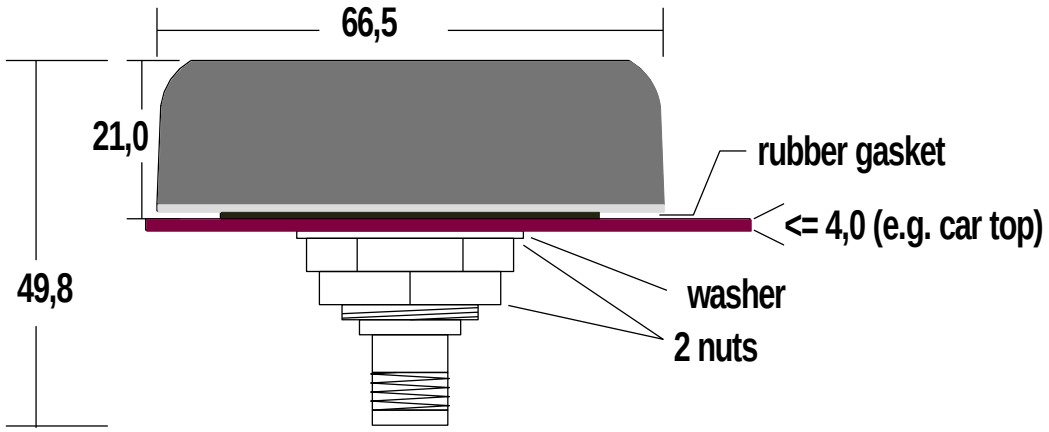


## 2.2 Antenna Installation

GPS, GLONASS and Galileo satellites are not stationary but circle round the globe in a period of about 12 hours. The antenna must be installed outdoors where an unobstructed view of the sky exists. Rooftops generally make good locations due to clear overhead sky with views to the horizon, allowing the antenna unit to see and track the maximum number of satellites throughout the day. Installations with obstructed views may prove operational but may experience reduced reception quality and the inability to simultaneously track the maximum number of satellites.

In addition to clear sky coverage, select a site which would not allow the antenna unit to become buried in drifted or accumulated snow.

When installing multiple antennas, we recommend separating them by at least 1 m.

When installing the antenna near other transmission antennas, we recommend separating it in height by at least 3 m.

## 2.3 The Antenna Cable

Use only a high quality 50 Ω coaxial cable from well-known manufactures, with low loss and high frequency.

The choice of the cable strongly depends on the length needed for your application. More length means higher signal loss. The longer the cable, the lower should be the loss of the cable, and this means enhanced quality.

Additionally, bending radius, outer diameter, and weight may be of interest for your installation.

One method to find a suitable cable is to compare amplifier gains (antenna amplifier, in-line amplifier, minimum gain at receiver input) with attenuations of all parts between antenna and receiver (lightning arrestor, cable, coupler plugs).

We start with a minimum recommended gain at receiver input of **+15 dB**. Any higher value will be welcome.

Our recommended antennas have **+40 dB** at output. If you use a different type, please find the amplifier gain at the specifications.

No more attenuation than the difference (our example: 40 – 15 = **+25 dB**) is allowed by all parts between antenna and receiver. Cable specifications give you attenuation [dB/100 m] at different frequencies. GPS/Galileo works at L1 C/A 1575,42 MHz frequency, GLONASS works at up to 1610 MHz. Attenuation has to refer to this frequency band (you have to interpolate if this frequency range is not listed).

If longer cables than 100 m are needed, use an in-line amplifier. In-line amplifier usually have a gain of **+15–25 dB**, this will enable much longer cables. Install an in-line amplifier as close to the antenna as possible.

Example of typical cables:

{These are guiding values; they will vary between different manufacturers}

| | RG174/U 7805R | RG58/U 7806A | H155 | RG213/U 8267 | LMR-240 | RG8/X 7808A | RG8 LMR-400 | LMR-600 |
|---|---|---|---|---|---|---|---|---|
| Cable Ø [mm] | 2.8 | 4.95 | 5.4 | 10.3 | 6.1 | 6.1 | 10.3 | 12.5 |
| Bending radius [mm] | 6.35 | 25.0 | 35 | 127 | 63.5 | 63.5 | 101.6 | 38.1 |
| Weight [kg/km] | 14.9 | 30 | 38 | 157 | 53 | 53.6 | 100 | 200 |
| Delay [ns/m] | 4.569 | 5.054 | 4.118 | 5.054 | 3.971 | 3.879 | 3.924 | 3.834 |
| Attenuation [dB/100m] 1610 MHz | 89.96 | 46.75 | 39.81 | 34.25 | 33.57 | 31.06 | 17.46 | 11.34 |
| Length of cable (→) at dB attenuation (↓): | | | | | | | | |
| 6 | 6.7 | 12.8 | 15.1 | 17.5 | 17.9 | 19.3 | 34.4 | 52.9 |
| 8 | 8.9 | 17.1 | 20.1 | 23.4 | 23.8 | 25.8 | 45.8 | 70.5 |
| 10 | 11.1 | 21.4 | 25.1 | 29.2 | 29.8 | 32.2 | 57.3 | 88.2 |
| 12 | 13.3 | 25.7 | 30.1 | 35.0 | 35.7 | 38.6 | 68.7 | 105.8 |
| 14 | 15.6 | 29.9 | 35.2 | 40.9 | 41.7 | 45.1 | 80.2 | 123.5 |
| 16 | 17.8 | 34.2 | 40.2 | 46.7 | 47.7 | 51.5 | 91.6 | 141.1 |
| 18 | 20.0 | 38.5 | 45.2 | 52.6 | 53.6 | 58.0 | 103.1 | 158.7 |
| 20 | 22.2 | 42.8 | 50.2 | 58.4 | 59.6 | 64.4 | 114.5 | 176.4 |
| 22 | 24.5 | 47.1 | 55.3 | 64.2 | 65.5 | 70.8 | 126.0 | 194.0 |
| 24 | 26.7 | 51.3 | 60.3 | 70.1 | 71.5 | 77.3 | 137.5 | 211.6 |

Example of application:

50 m cable length is needed.
Attenuation should be ≤ 20 dB.

Find value "20" at first column at "Length of cable at dB attenuation". This row gives you the maximum length of each cable type. You can use for example H155 cable. Any type of cable in the columns further to the right will do even better.

Recommendations for typical cable lengths:

Example:

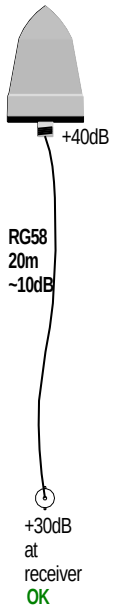


| Length needed | Type of cable |
|---|---|
| ≤ 30 m | RG58U or H155 |
| 20–35 m | H155 |
| 30–40 m | LMR-240 or RG8/X |
| 35–50 m | RG8/X |
| 50–80 m | LMR-400<br>or in-line amplifier + H155 |
| 70–100 m | LMR-600<br>or in-line amplifier + RG8/X |
| 100–180 m | In-line amplifier + LMR-400 |
| 160–280 m | In-line amplifier + LMR-600 |

Example:

| | |
|---|---|
| | The cable transports the power for the antenna. Please make sure that there is no short-circuit between the inner and outer conductor of the cable! |

## 2.4 RUB G3-2: Double GNSS Receiver Assembly

This option enables the following features:

- It greatly improves the availability of GNSS signals.
- It gives redundancy on antenna and receiver.
- It solves the problem on OB van installations, when a fixed mounted antenna is blocked by a hall ceiling or by surrounding buildings. The 2nd antenna with a long cable can be placed to a position with a clear view to the sky. The 2nd receiver will now see satellites and will deliver stable output signals.

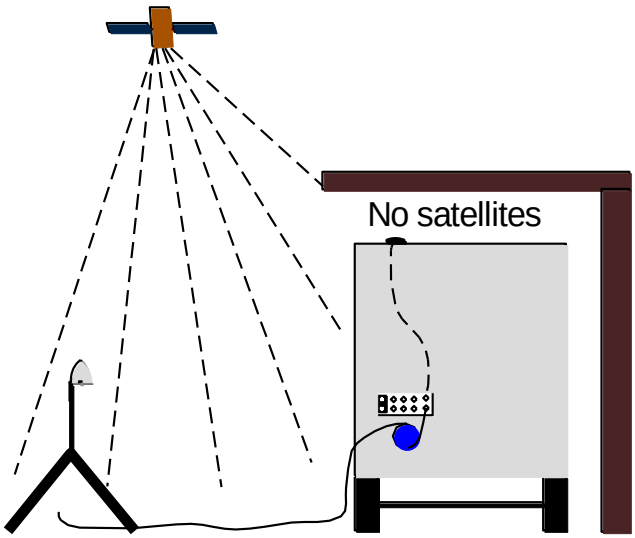


| | |
|---|---|
| ⚠ | It is recommended to have both antennas connected permanently! |

The G3 module permanently monitors both receivers and automatically uses the signals of the receiver with best reception quality.

Configuration: select "Sync Mode = GNSS Automatic" at the **Reference** configuration page.

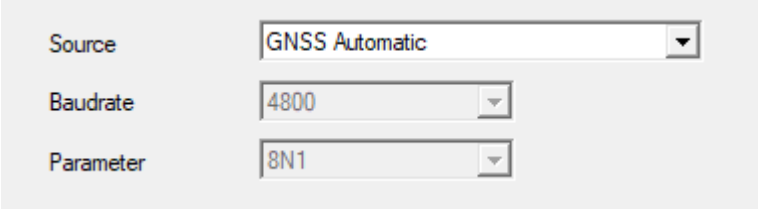


If cable lengths are different, calculate the propagation delays and enter the results at the "Antenna Delay" entry. For more information please refer to chapter "The Antenna Cable".

# 3 Applications

RUB G3 is a versatile unit, its PTP engine and GNSS receiver can be used to together but also be used independently. This allows to use it in many different applications. Here some typical applications are being described.

## 3.1 PTP Slave

The simplest application of RUB G3 is a PTP Slave. It synchronizes to a PTP Grandmaster that presupposed to be available in an existing LAN. The output is a PPS and a time+date string that can be used to synchronize e.g., a RUB GT. The PTP Slave only makes use of RUB G3's PTP engine while the GNSS receiver is idle. The system is connected like this:

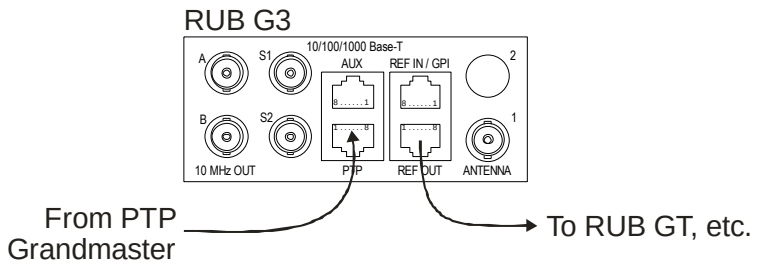


The following settings need to be done with RUB G3:

1. Set PTP / Operating Mode to PTP Slave
2. Set Output / Serial Output / Source to PTP Engine

For use with a RUB GT do these settings:

3. Set Output / Serial Output / Protocol to UTC Time+Date + Leap Seconds
4. Set Output / Serial Output / Baudrate to 2400
5. Set Output / Serial Output / Parameter to 7E2

That leads to this RUB G3 block diagram:

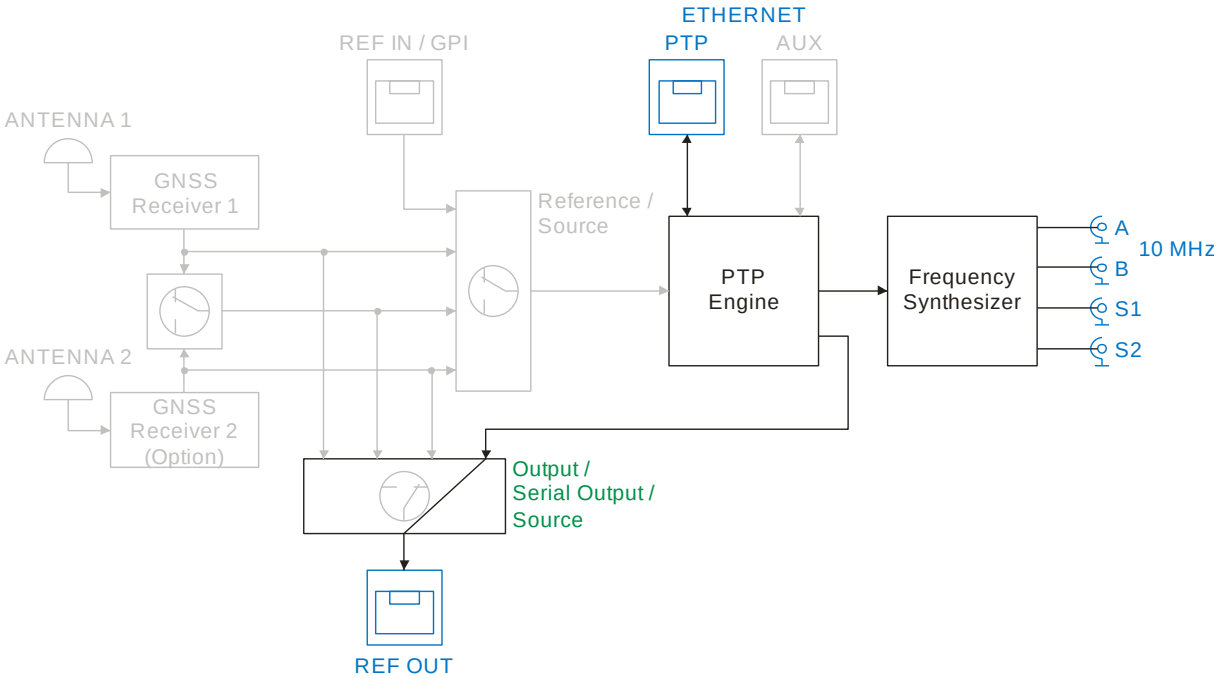


10 MHz A and B connectors will output a PTP disciplined sine wave. S1 and S2 connectors may be programmed to output additional frequencies, including PPS.

## 3.2 PTP Grandmaster with GNSS Receiver

This application shows a RUB G3 used as GNSS disciplined PTP Grandmaster so that other PTP Slaves in in an existing LAN can synchronize to it. Additionally, a PPS and a time+date string are being output that can be used to synchronize e.g., a RUB GT. The PTP Grandmaster makes use of RUB G3's PTP engine and of the GNSS receiver. The system is connected like this:

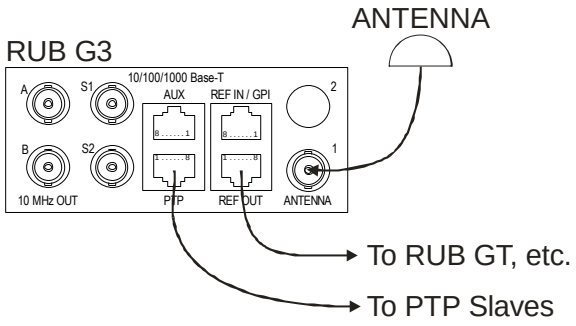


The following settings need to be done with RUB G3:

1. Set PTP / Operating Mode to PTP Grandmaster
2. Set Reference / Source to GNSS receiver 1
3. Set Output / Serial Output / Source to GNSS receiver 1

For use with a RUB GT do these settings:

4. Set Output / Serial Output / Protocol to UTC Time+Date + Leap Seconds
5. Set Output / Serial Output / Baudrate to 2400
6. Set Output / Serial Output / Parameter to 7E2

That leads to this RUB G3 block diagram:

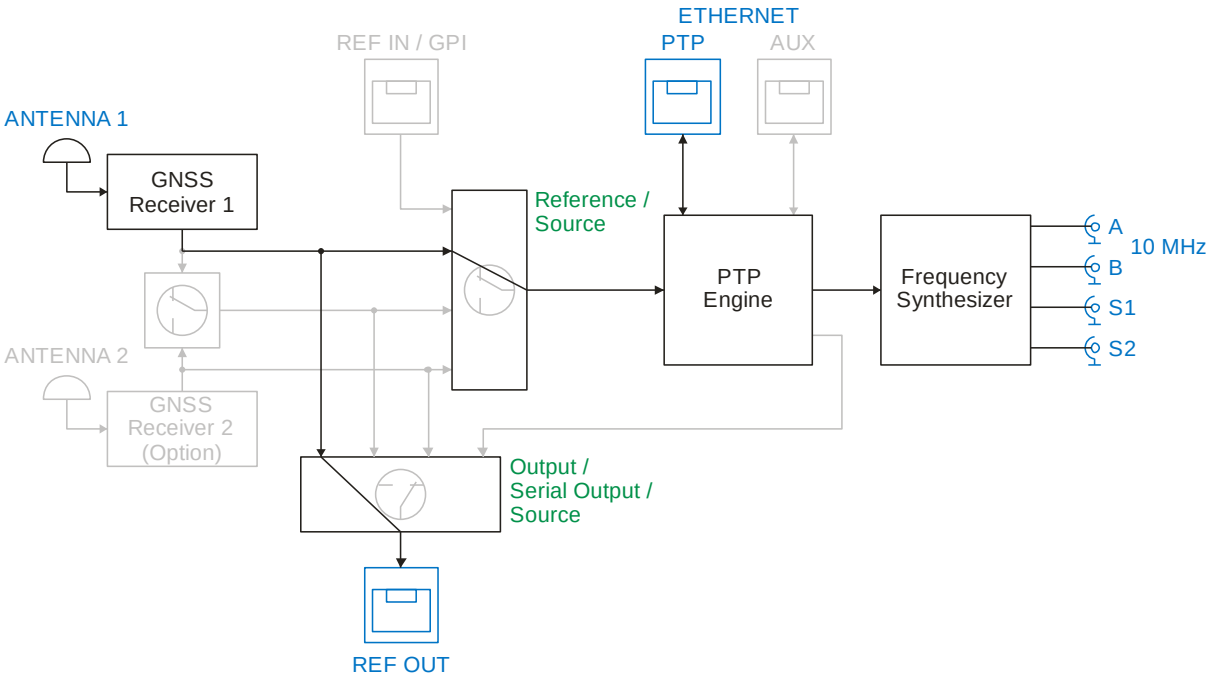


10 MHz A and B connectors will output a GNSS disciplined sine wave. S1 and S2 connectors may be programmed to output additional frequencies, including PPS.

## 3.3 PTP Grandmaster with Double GNSS Receivers

The RUB G3 can be equipped with dual GNSS receivers to allow connection of two GPS antenna that can solve difficult reception conditions. The GNSS receiver with the better reception can be automatically selected and will be fed to the PTP engine. Beside the PTP Grandmaster functionality a PPS and a time+date string are being output that can be used to synchronize e.g., a RUB GT. The system is connected like this:

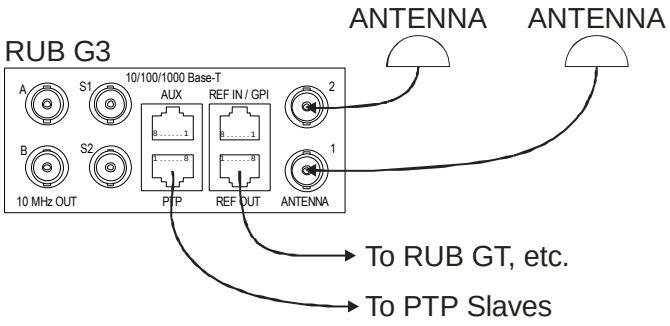


The following settings need to be done with RUB G3:

1. Set PTP / Operating Mode to PTP Grandmaster
2. Set Reference / Source to GNSS Automatic
3. Set Output / Serial Output / Source to GNSS Automatic

For use with a RUB GT do these settings:

4. Set Output / Serial Output / Protocol to UTC Time+Date + Leap Seconds
5. Set Output / Serial Output / Baudrate to 2400
6. Set Output / Serial Output / Parameter to 7E2

That leads to this RUB G3 block diagram:

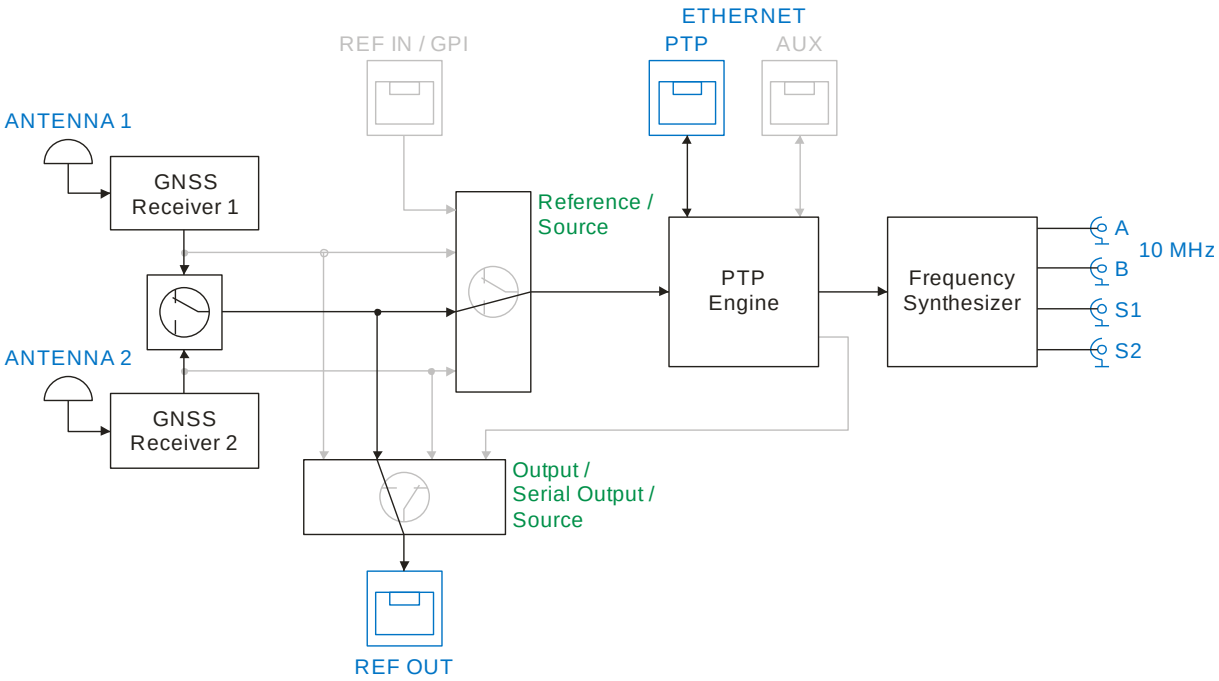


10 MHz A and B connectors will output a GNSS disciplined sine wave. S1 and S2 connectors may be programmed to output additional frequencies, including PPS.

## 3.4 Redundant PTP Grandmaster with Single GNSS Receiver

If redundant GNSS disciplined PTP Grandmasters are required, two RUB G3 modules can be combined. The first RUB G3 includes the GNSS receiver and the primary PTP Grandmaster. The second RUB G3 includes the secondary PTP Grandmaster. The system is connected like this:

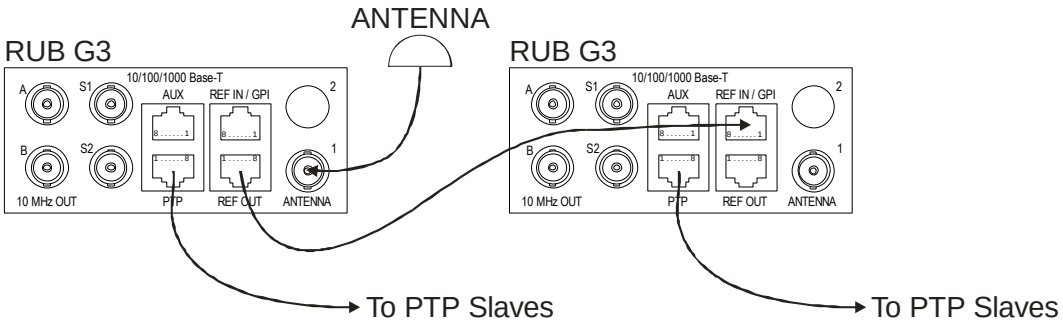


The following settings need to be done with the first RUB G3, the primary PTP Grandmaster:

1. Set PTP / Operating Mode to PTP Grandmaster
2. Set PTP / Priority 2 to 127
3. Set Reference / Source to GNSS receiver 1

The following settings need to be done with the second RUB G3, the secondary PTP Grandmaster:

4. Set PTP / Operating Mode to PTP Grandmaster
5. Set PTP / Priority 2 to 128
6. Set Reference / Source to GNSS receiver 1

The first RUB G3's block diagram is shown in chapter 3.2. The second RUB G3' block diagram is shown here:

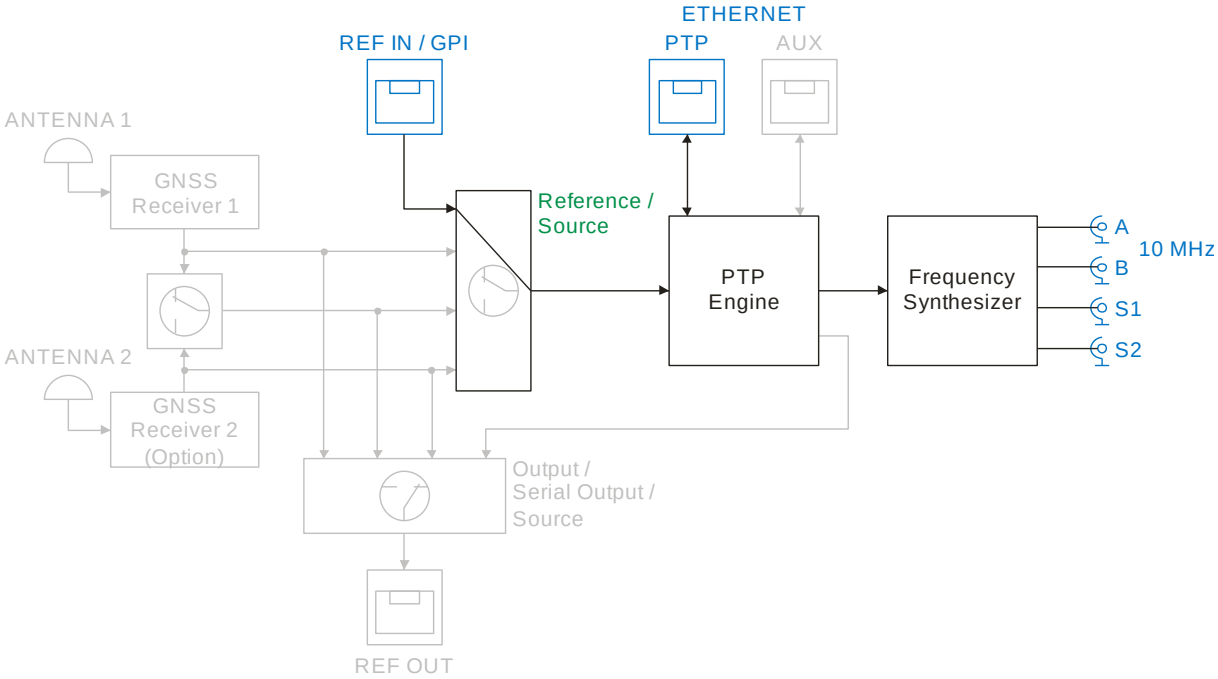

## 3.5 Fully Redundant PTP Grandmaster with GNSS Receivers

Two RUB G3 together with a RUB SR can be combined to a fully redundant GNSS disciplined PTP Grandmaster system. The GNSS receivers of both RUB G3 are configured to output its PPS and time+date signals to the RUB SR. That module switches to the most fittest GNSS receiver and transmits the signals to both PTP Grandmasters, the first configured to primary PTP Grandmaster and the second to secondary PTP Grandmaster. The system is connected like this:

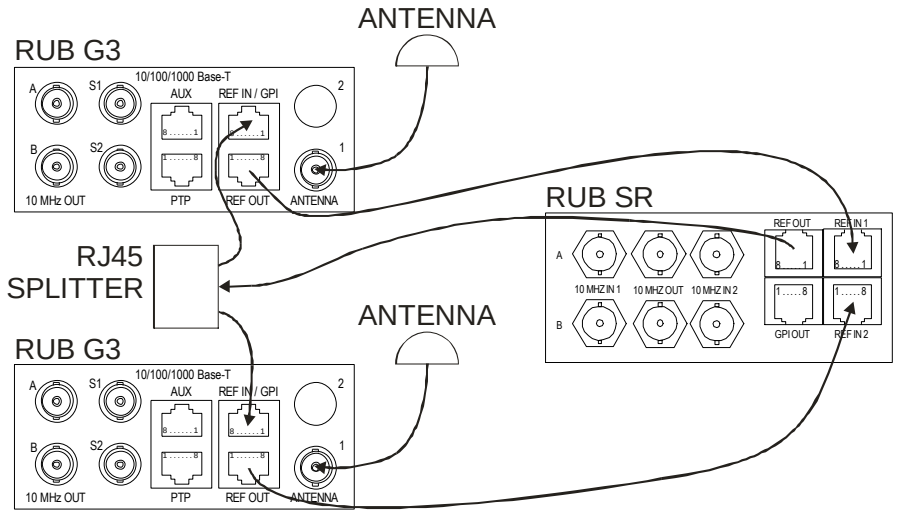


A 1:1 passive RJ45 splitter is used to distribute the signals from RUB SR to both RUB G3.

The following settings need to be done with the first RUB G3, the primary PTP Grandmaster:

1. Set PTP / Operating Mode to PTP Grandmaster
2. Set PTP / Priority 2 to 127
3. Set Reference / Source to External: Meinberg (Std or GPS) + PPS
4. Set Reference / Baudrate to 2400
5. Set Reference / Parameter to 7E2
6. Set Output / Serial Output / Protocol to UTC Time+Date + Leap Seconds
7. Set Output / Serial Output / Baudrate to 2400
8. Set Output / Serial Output / Parameter to 7E2

The following settings need to be done with the second RUB G3, the secondary PTP Grandmaster:

9. Set PTP / Operating Mode to PTP Grandmaster
10. Set PTP / Priority 2 to 128
11. Set Reference / Source to External: Meinberg (Std or GPS) + PPS
12. Set Reference / Baudrate to 2400
13. Set Reference / Parameter to 7E2
14. Set Output / Serial Output / Protocol to UTC Time+Date + Leap Seconds
15. Set Output / Serial Output / Baudrate to 2400
16. Set Output / Serial Output / Parameter to 7E2

The RUB SR does not need special settings.

That leads to this block diagram for both RUB G3:

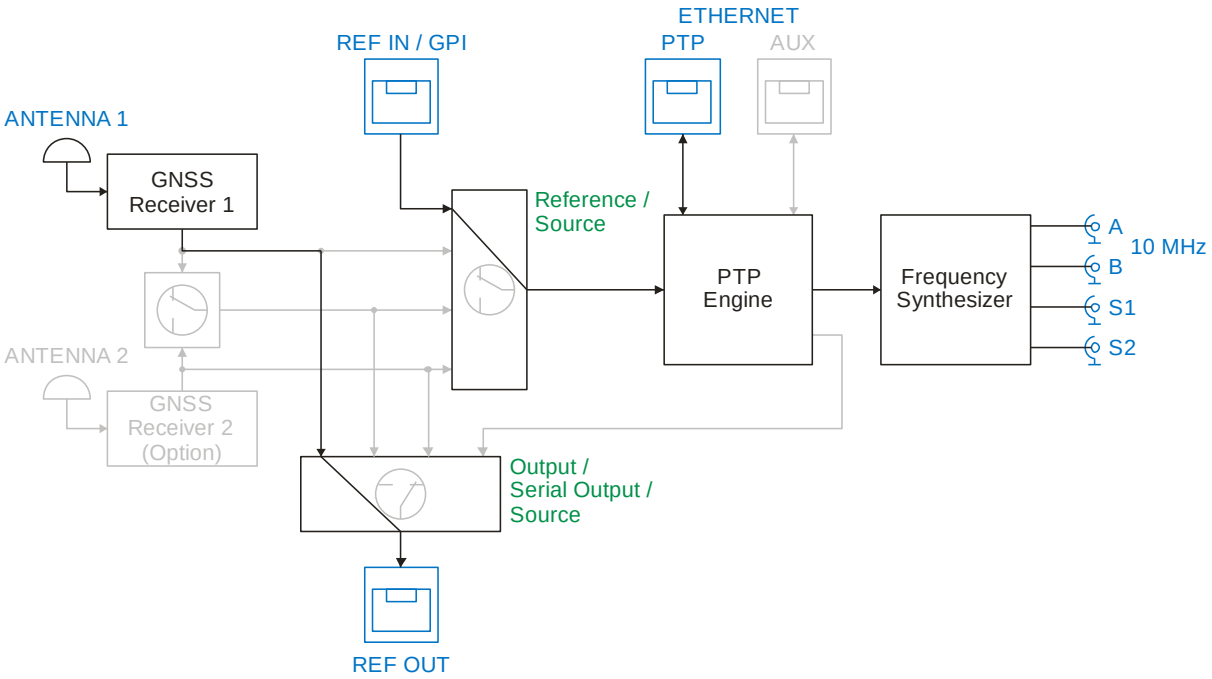

# 4 Status Monitor

## 4.1 Status Monitor by the Ethernet Module

The RUBIDIUM SERIES HTTP server, which is located in the Ethernet module (**RUB IE** or **RUB PM**), offers a status monitor. There is no HTTP server running on the G3 module itself.

Please refer to the '*Functional Descriptions and Specifications RUB Ethernet*' manual for a detailed description of the RUB Ethernet module and how to access a RUBIDIUM module.

Start an Internet Browser and type in the IP address of the Ethernet Module.

If G3 does not appear in the bar on the left, you have to enter the correct address of the chassis at the **Frame** entry.

Click **G3** to access the G3 module.

Click the Status Monitor button to open the status monitor. It is not necessary to perform a **LOGIN**.

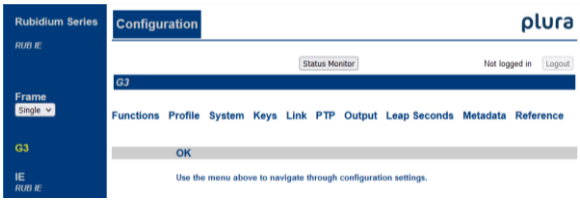


Requirements:

- Please have Java Runtime Environment 1.6.0 ("Java 6") or higher installed (for example download at www.java.com).
- Java should be installed as a browser plug-in (a Windows installation will do this automatically if you download Java from the source mentioned above).
- The Status Monitor works with all operating systems which support Java.

## 4.2 Status Monitor by a PC Program

The PC program **RubStatSE.exe** uses the **PC** interface (RS232 or USB) of the RUBIDIUM housing. This program is part of the "*Rubidium Configuration and Status Monitor PC Programs*" packet you can download at https://plurainc.com/products/g3/.

Execute this program, select the COM port or USB connection and press the **scan** button to get a list of the modules plugged to this housing. Select the module and press the **connect** button.

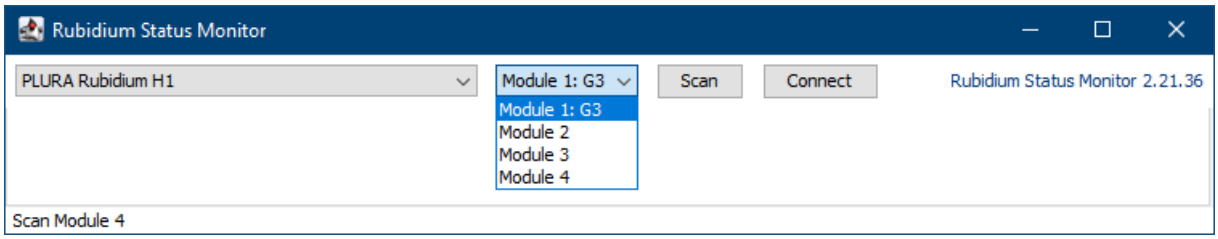


Requirements:

- Please have Java Runtime Environment 1.6.0 or higher installed (for example download at www.java.com).
- For a Windows operating system: Please follow the description of **RubStatSE_Readme.txt**.
- For a Linux operating system: Available on request.

## 4.3 Status: PTP

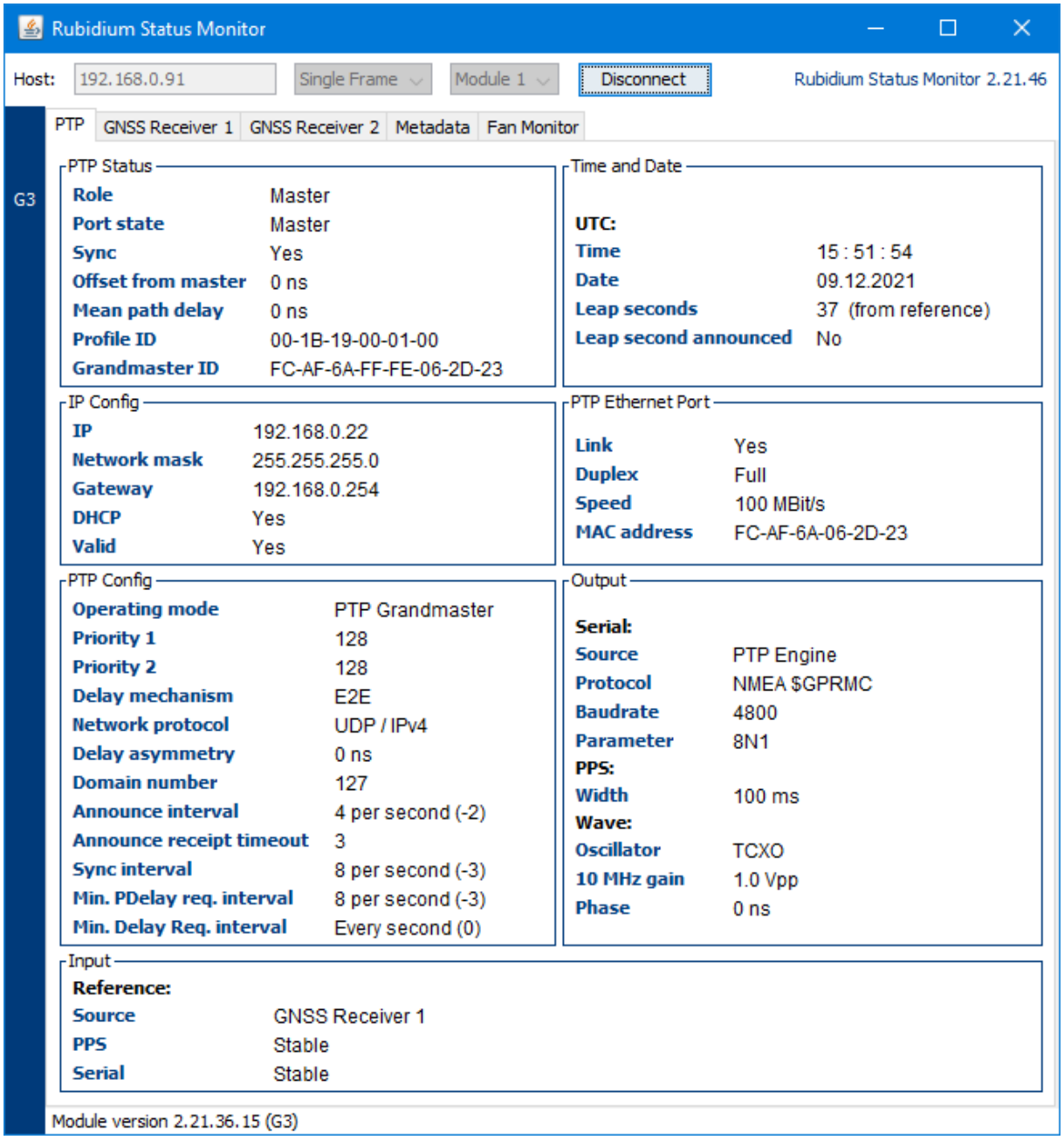


| PTP Status | | Time and Date | |
|---|---|---|---|
| Role | Slave or Grandmaster (or error) | UTC: | |
| Port State | State of the PTP port | Time | Current UTC time |
| Sync | Yes/No | Date | Current UTC date |
| Offset from master | Measured offset | Leap seconds | Current difference between PTP time and UTC in seconds |
| Mean path delay | Compensated network delay | Leap second announced | Is there a known future leap second? |
| Profile ID | ID of the current PTP profile | | |
| Grandmaster ID | ID of the PTP Grandmaster | | |

| IP Config | |
|---|---|
| IP | Current IP address |
| Network mask | Current network mask |
| Gateway | Current gateway |
| DHCP | DHCP enabled Yes/No |
| Valid | IP configuration valid Yes/No |

| PTP Ethernet Port | |
|---|---|
| Link | Yes/No |
| Duplex | Full/Half |
| Speed | 10/100/1000 MBit/s |
| MAC address | MAC address of PTP Ethernet interface |

| PTP Config {Feedback on current set-up} | |
|---|---|
| Operating Mode | Grandmaster or Slave |
| Priority 1 | 0-255 |
| Priority 2 | 0-255 |
| Delay mechanism | E2E/P2P |
| Network protocol | IEEE802.3 or UDP/IPv4 |
| Delay asymmetry | Nanoseconds |
| Domain number | 0-127 |
| Announce interval | Packets per second |
| Announce receipt timeout | 2-10 seconds |
| Sync interval | Packets per second |
| Min. PDelay req. interval | Packets per second |
| Min. Delay req. interval | Packets per second |

| Output {Feedback on current set-up} | |
|---|---|
| Serial: | |
| Source | Source of real-time output |
| Protocol | Serial time+date string |
| Baudrate | 2400-38400 bps |
| Parameter | Data bits, parity, stop bits |
| PPS: | |
| Width | 0.25-250 ms |
| Wave: | |
| Oscillator | TCXO or OCXO |
| 10 MHz gain | 0.5-1.5 $V_{PP}$ |
| Phase | Measured 10 MHz phase related to PPS |

| Input | |
|---|---|
| GPS: | |
| Source | Source of real-time reference in grandmaster mode |
| PPS | Status of PPS input in grandmaster mode |
| Serial | Status of serial time+date input in grandmaster mode |

## 4.4 Status: GNSS Receiver

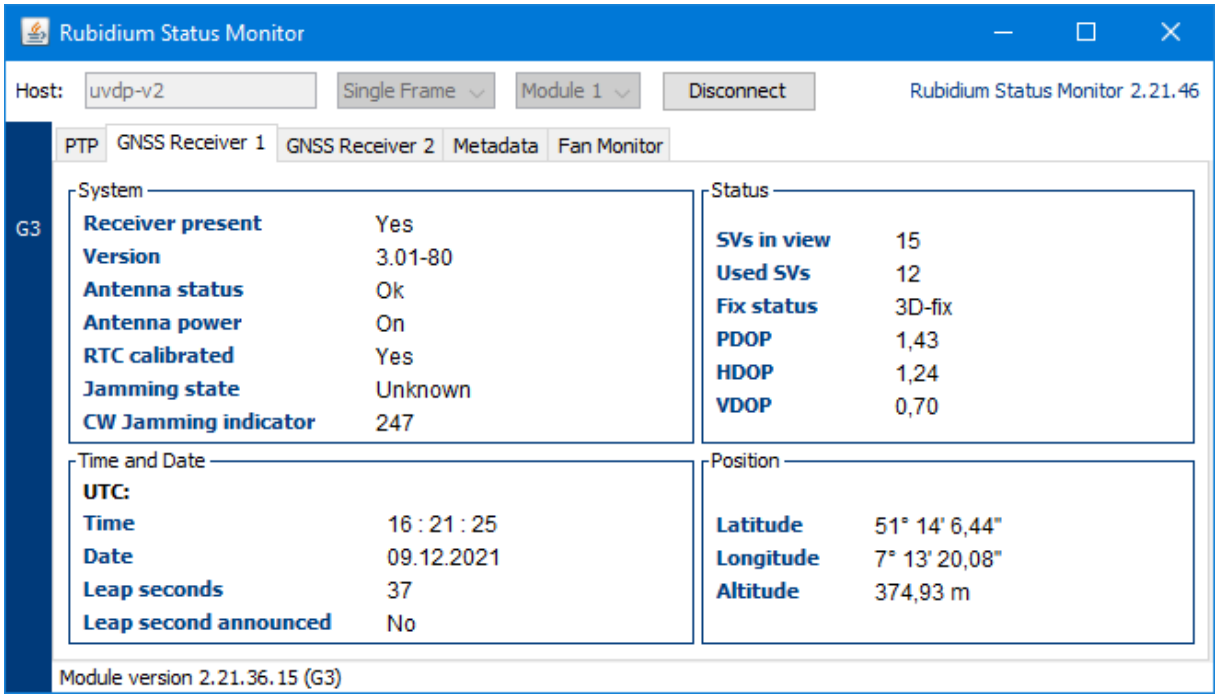


**System**

| | |
|---|---|
| Receiver present | Yes/No |
| Version | Firmware version |
| Antenna status | Yo |
| Antenna power | Mt |
| RTC calibrated | Internal clock was set from GNSS |
| Jamming state | Status if amming has been detected or suspected |
| Unknown | Jamming/interference monitor not available. |
| Ok | No significant jamming. |
| Warning | Interference visible but fix OK |
| Critical | interference visible and no fix. |
| CW Jamming indicator | 0= no CW jamming, 255 = strong CW jamming |

**Status**

| | |
|---|---|
| SVs in View | Number of visible satellites with an elevation of ≥ 5 ° at the current constellation |
| Used SVs | Number of satellites currently used for navigation |
| Fix Status | State of position fix: |
| | No Fix fix not available |
| | 2D fix minimum 3 satellites |
| | 3D fix minimum 4 satellites |
| PDOP | Position dilution of precision |
| | 1–2 excellent |
| | 2–5 good |
| | 5–10 moderate |
| | 10–20 fair |
| | > 20 poor |
| HDOP | Horizontal dilution of precision |
| VDOP | Vertical dilution of precision |

**Time and Date**

| | |
|---|---|
| UTC: | |
| Time | Current UTC time |
| Date | Current UTC date |
| Leap seconds | Current difference between TAI from GNSS and UTC in seconds |
| Leap second announced | Is there a known future leap second? |

**Position**

| | |
|---|---|
| Latitude | Latitude |
| Longitude | Longitude |
| Altitude | Altitude, mean sea level |

## 4.5 Status: Metadata

This page shows the SMPTE synchronization metadata as defined in ST 2059-2.

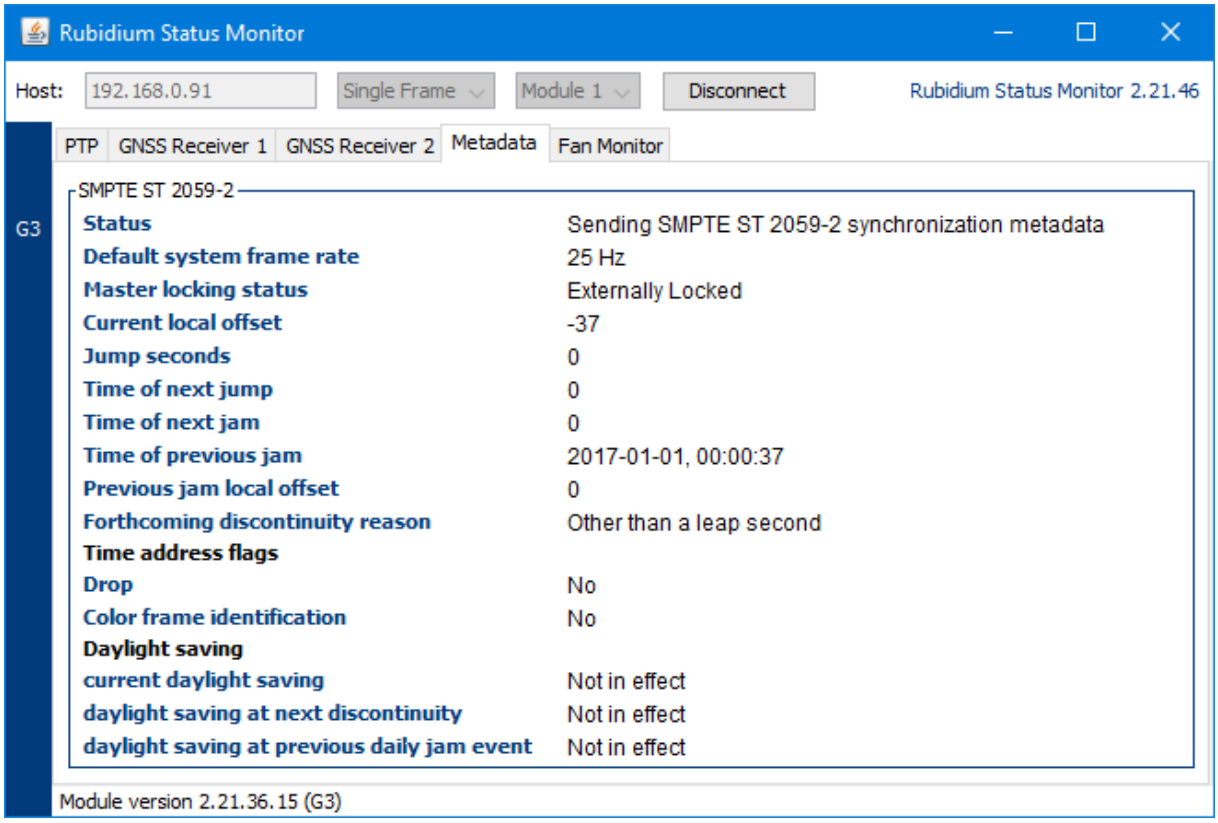


### SMPTE ST 2059-2

| | |
|---|---|
| Status | Shows if metadata are sent or received |
| Master locking status | Complementary information to clock class |
| Current local offset | Offset in seconds of Local Time from grandmaster PTP time. |
| Jump seconds | The size of the next discontinuity, in seconds, of local time. |
| Time of next jump | Value of the seconds portion of the grandmaster PTP time at the time that the next discontinuity of the current local offset will occur. |
| Time of next jam | Value of the seconds portion of the PTP time corresponding to the next scheduled occurrence of the daily jam. |
| Time of previous jam | Value of the seconds portion of the PTP time corresponding to the previous occurrence of the daily jam |
| Previous jam local offset | Value of current local offset at the time of the previous Daily Jam event. |
| Forthcoming discontinuity reason | Leap second or not. |
| Time address flags | |
| Drop | SMPTE ST 12-1 drop flag. |
| Color Frame Identification | SMPTE ST 12-1 color framing flag. |
| Daylight saving | |
| Current daylight saving | Yes or no. |
| Daylight saving at next discontinuity | Yes or no. |
| Daylight saving at previous daily jam event | Yes or no. |

## 4.6 Status of Fan and Power Supplies

This module – as all configurable RUBIDIUM modules – is able to monitor the fan and power supplies which are plugged to the same housing as **G3**.

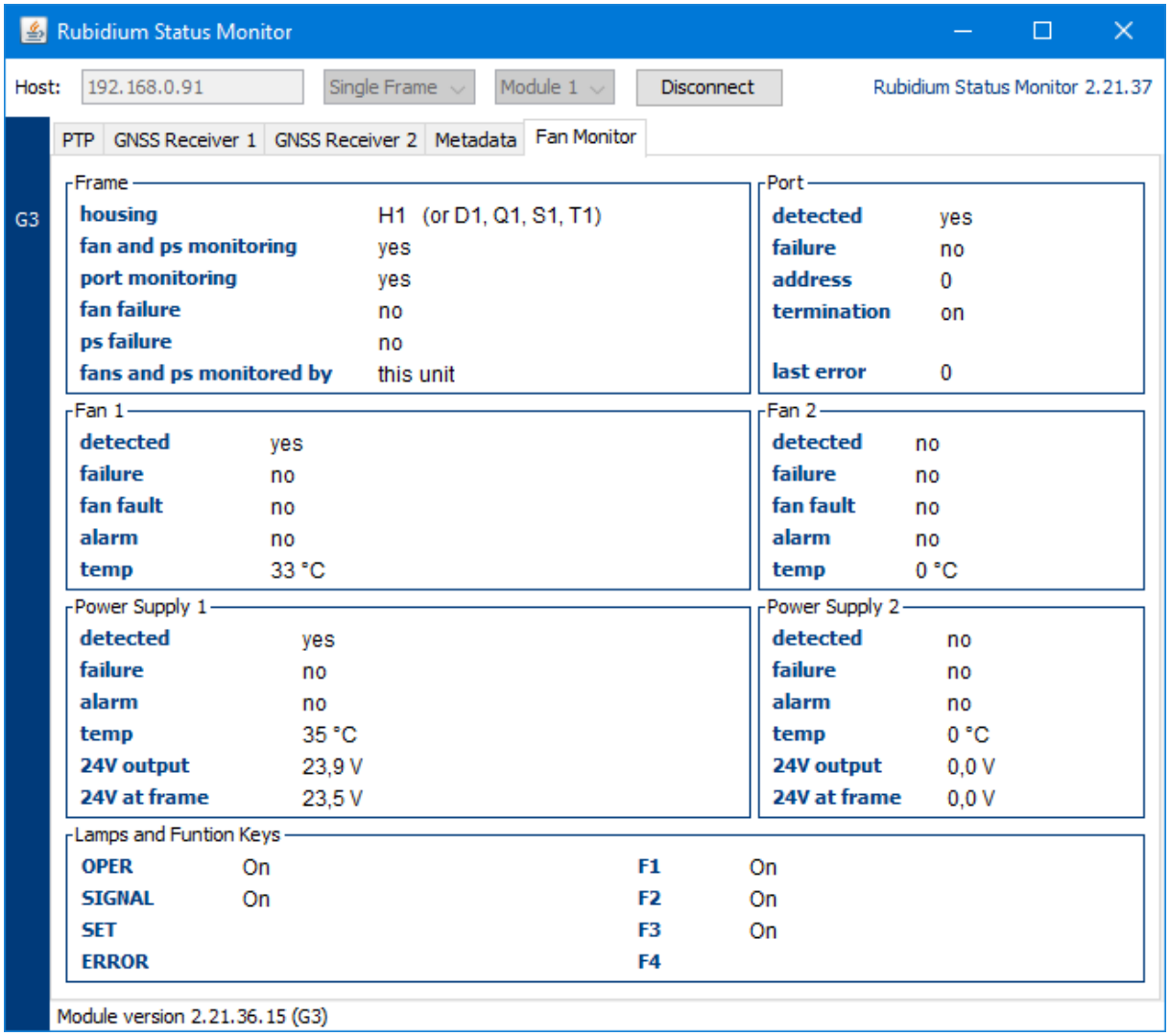


Please refer to the document *'Installation & Systems Manual RUBIDIUM SERIES'* for a detailed description.

# 5 The Rubidium Configuration Tools

## 5.1 The Rubidium Configuration PC Program

Please refer to the

*'Installation & Systems Manual RUBIDIUM SERIES'*

for a general description of this program and how to install it. In this document, please notice the chapter *'The Rubidium Configuration PC Program'* and its subchapters:

- Overview
- Installation
- Connection to RUBIDIUM SERIES Chassis
- Starting the Program
- Store, Load and Update the Configuration on your PC
- The "Profile" Tab: Store and Load Configurations on the Module

The program RUBIDIUM CONFIGURATION uses various tab cards. With one click on the button **Configure** all available and currently activated tabs of this specific module are displayed.

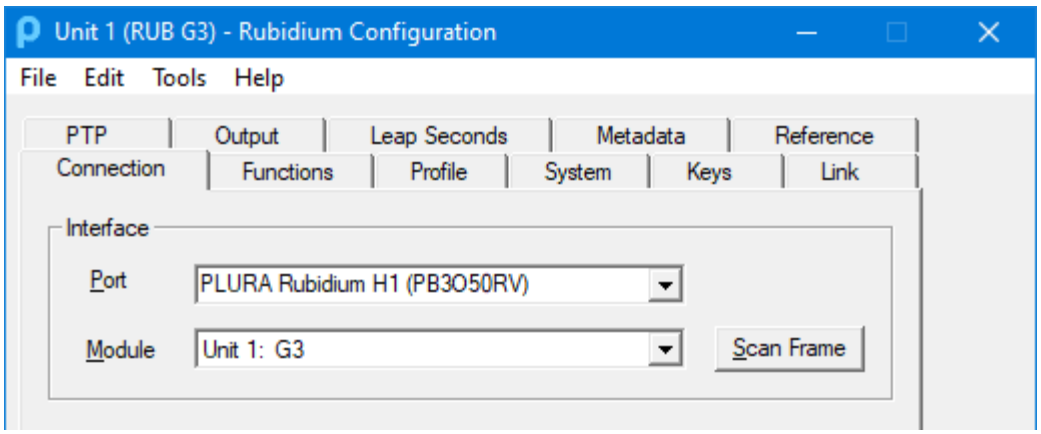


Any changes at a tab will immediately be stored at the module. If you enter a number or a text press the **tabulator key** at the computer's keyboard afterwards.

## 5.2 The Rubidium Series HTTP Server

The RUBIDIUM SERIES HTTP server, which is located in the Ethernet module (**RUB IE** or **RUB PM**), offers a status monitor. There is no HTTP server running on the G3 module itself.

Please refer to the '*Functional Descriptions and Specifications RUB Ethernet*' manual for a detailed description of the RUB Ethernet module and how to access a RUBIDIUM module.

Start an Internet Browser and type in the IP address of the Ethernet Module.

If G3 does not appear in the bar on the left, you have to enter the correct address of the chassis at the **Frame** entry.

Click **G3** to access the G3 module.

A horizontal menu appears which shows a list of all configuration pages which are currently available. With a click on one of these entries of the menu a configuration page will be opened where you can see and change parameters. If it is the first time that you try to open a configuration page, you have to pass the **LOGIN**.

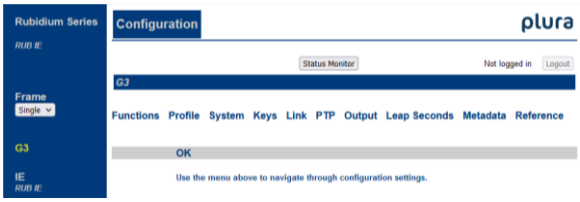


Changes on a parameter will not be stored automatically. At the bottom of each page there are two buttons which should be used to transfer the parameters:

**Save To Module**: Click this button to store the changes on the module.

**Reload From Module**: Click this button to refresh the configuration page.

## 5.3 “Functions“: Functions of the Module

The configuration page **Functions** indicates the complete range of functions. It is possible to individually switch on or off functions.

Configuration (example shows a screen shot of the PC program tab):

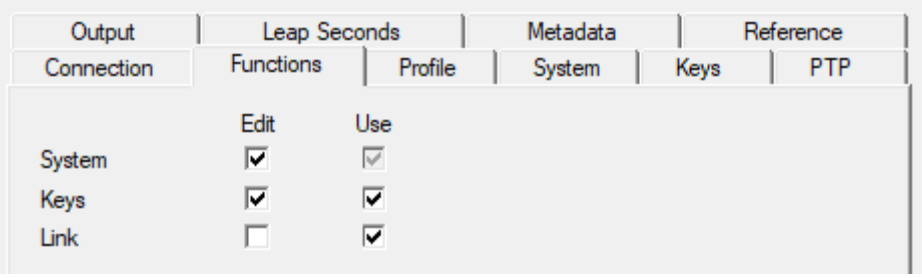


The **Edit** and **Use** checkboxes define the state of a function:

| **Edit** | **Use** | State of a function |
|---|---|---|
| | | Function disabled; corresponding configuration page not available. |
| √ | √ | Function enabled; corresponding configuration page available. |
| | √ | Function enabled; corresponding configuration page not available.<br>This avoids any unintentional operating. |

- We suggest that you uncheck **Use** of all functions you are presently not using.
- We suggest that you uncheck **Edit** of all functions you are presently not configuring. That avoids unintentional operating and malfunctions.

Functions **Profile**, **PTP**, **Output**, **Leap Seconds**, **Metadata** and **Reference** cannot be switched off.

Function **System** cannot be switched off completely, i.e. the corresponding **Use** checkbox is inoperable.

**Attention using the Browser:**

Changes on any parameter will not be transferred to the module automatically. Click “**Save To Module**” to store the changes at this configuration page to the module.

List of functions:

| | |
|---|---|
| **Profile** | Store and load Set-Ups (*) |
| **System** | Name, Boot, Info, Fan, SNMP |
| **Keys** | Keys and Lamps, LEDs and GPI |
| **Link** | Communication between modules |
| **PTP** | PTP parameters of synchronization |
| **Output** | Serial interface, PPS and 10 MHz outputs |
| **Leap Seconds** | Setting the Leap Seconds |
| **Metadata** | SMPTE Synchronization Metadata |
| **Reference** | PTP Real-Time Reference Input |

(*) refer to *‘Installation & Systems Manual RUBIDIUM SERIES’*

## 5.4 “Keys“: Keys and Lamps, LEDs and GPI

RUB1 version modules have four illuminated buttons (keys and lamps) and four LEDs (Light Emitting Diodes). Additionally, four GPI (input or output) are available. Basically, the functions of these inputs and outputs are programmable.

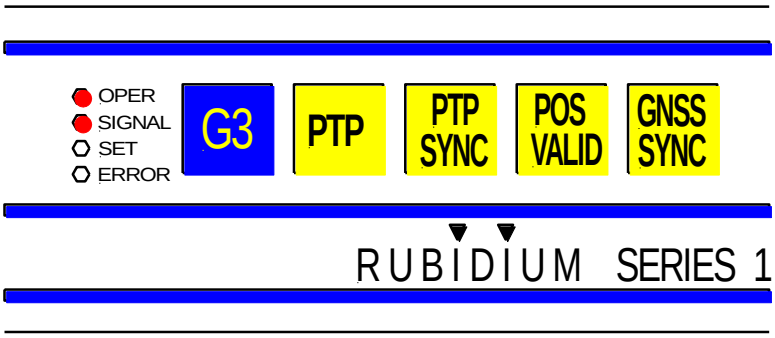


Configuration (example shows a screen shot of the PC program tab):

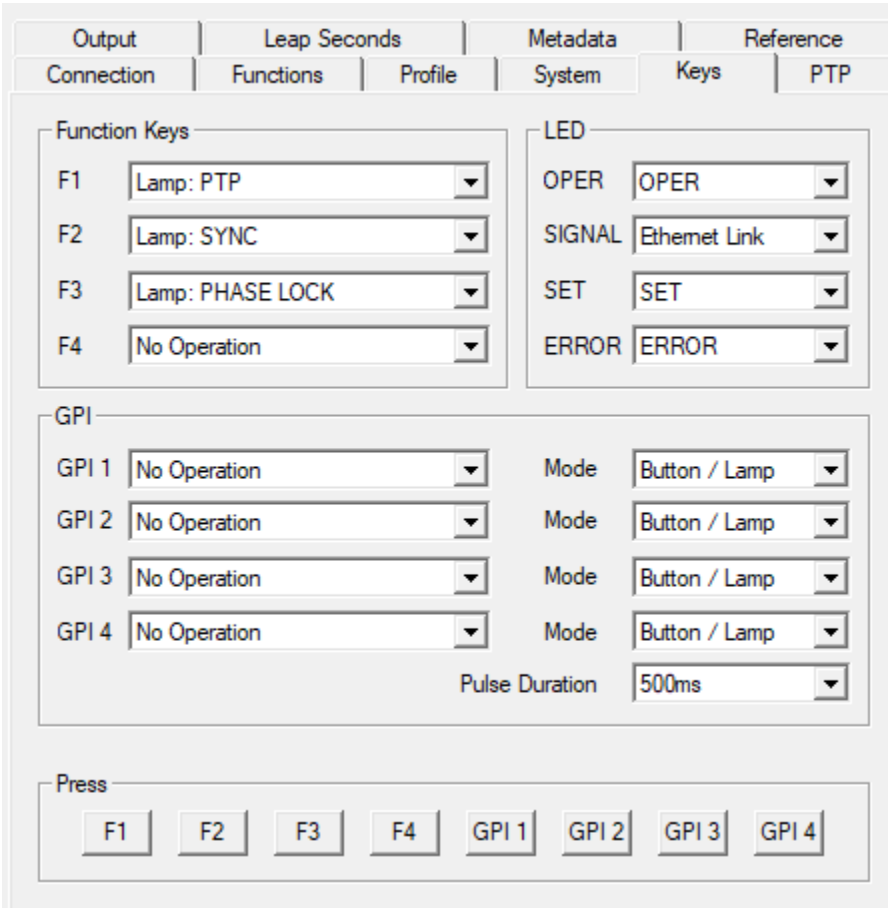

**Function Keys (keys and lamps)**

RUB1 version modules offer four keys F1, F2, F3, and F4. They can get a function independently from each other. Select a function from the drop-down list. This selects the function of the lamps as well. The following functions are especially provided for this module:

| | | |
|---|---|---|
| Lamp: PTP | Feedback: | Slave operating mode: The PTP grandmaster has been found.<br>Grandmaster operating mode: Serial reference is valid, and device is in PTP grandmaster mode. |
| Lamp: SYNC | Feedback: | Time & date has been set from PTP grandmaster. |
| Lamp: PHASE LOCK | Feedback: | 10 MHz outputs are synchronized to PPS. |
| Lamp: Ethernet Link | Feedback: | An Ethernet link on the PTP port has been established. |
| Lamp: GNSS Receiver “x” Sync | Feedback: | GNSS receiver “x” (1 or 2) is in sync to real-time received from satellites. |
| Lamp: Current GNSS Rcv. Sync | Feedback: | Current GNSS receiver is in sync to real-time received from satellites. |
| Lamp: GNSS Rcv. “x” Pos. Valid | Feedback: | GNSS receiver “x” (1 or 2) has a 3D-fix. |
| Lamp: Current GNSS Rcv. Pos. Valid | Feedback: | Current GNSS receiver has a 3D-fix. |

**LED**

RUB1 version modules offer four LEDs (named OPER, SIGNAL, SET, and ERROR) which can get a function independently from each other. Select a function from the drop-down list. The following functions are especially provided for this module:

| | |
|---|---|
| OPER | Lights up, if the module is operating. |
| Ethernet Link | An Ethernet link on the PTP port has been established. |

**GPI**

GPI can be used as input or output. All function key programming is available (see above).

## 5.5 “PTP“: Operating Parameters of Synchronization

Configuration (example shows a screen shot of the PC program tab):

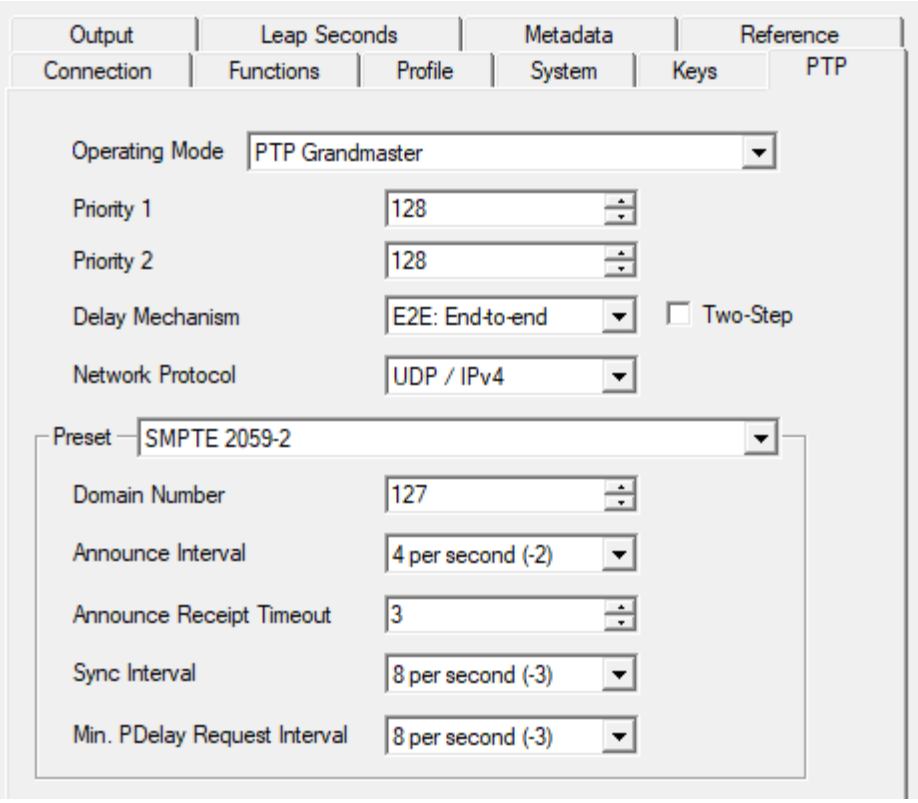


| | |
|---|---|
| **Operating Mode** | The operating mode specifies role of the PTP engine. Please refer to chapter 1.6 for an detailed explanation of PTP operating modes.<br>Possible values: PTP Slave,<br>PTP Grandmaster,<br>PTP Grandmaster with PTP fallback,<br>PTP Boundary clock, or<br>PTP Boundary clock with GPS.<br>Default: PTP Slave. |
| **Priority 1** | Priority 1 specifies the priority to be used in the execution of the BMCA.<br>Possible values: 0 to 255.<br>SMPTE 2059-2 recommendation: 128. |
| **Priority 2** | Priority 2 specifies the secondary priority to be used in the execution of the BMCA.<br>Possible values: 0 to 255.<br>SMPTE 2059-2 recommendation: 128. |
| **Delay Mechanism** | The delay mechanism specifies the delay measuring option used by PTP.<br>Possible values: E2E (end-to-end) or P2P (per-to-peer).<br>Default: E2E. |

**Network Protocol** Specifies the transport protocol of PTP packages over the network.

| | |
|---|---|
| Possible values: | IEEE 802.3, UDP / IPv4 or UDP / IPv6. |
| SMPTE 2059-2 recommendation: | UDP / IPv4 or UDP / IPv6. |

**Preset**

**Domain Number** A domain consists of one or more PTP devices communicating with each other as defined by the protocol.

| | |
|---|---|
| Possible values: | 0 to 127. |
| SMPTE 2059-2 recommendation: | 127. |

**Announce Interval** Specifies the mean time interval between successive Announce messages. This interval in concert with Announce Receipt Timeout (see below) governs how quickly the BMCA re-configures the system in the event of a master failure.

| | |
|---|---|
| Possible values: | 8 per second ($2^{-3}$ s) to every 2 seconds ($2^{1}$ s). |
| SMPTE 2059-2 recommendation: | 4 per second ($2^{-2}$ s). |

**Announce Receipt Timeout** Specifies the number of Announce Intervals (see above) that have to pass without receipt of an Announce message before the occurrence of the event.

| | |
|---|---|
| Possible values: | 2 to 10. |
| SMPTE 2059-2 recommendation: | 3. |

**Sync Interval** Specifies the mean time interval between successive Sync messages.

| | |
|---|---|
| Possible values: | 128 per second ($2^{-7}$ s) to 2 per second ($2^{-1}$ s). |
| Default: | 8 per second ($2^{-3}$ s). |

**Min. PDelay Request Interval** Specifies the minimum permitted mean time interval between successive Pdelay_Req messages sent over a link.

| | |
|---|---|
| Possible values: | 128 per second ($2^{-7}$ s) to every 16 seconds ($2^{4}$ s). |
| Default: | 8 per second ($2^{-3}$ s). |

# 5.6 “Output“: Serial interface, PPS and 10 MHz outputs

Configuration (example shows a screen shot of the PC program tab):

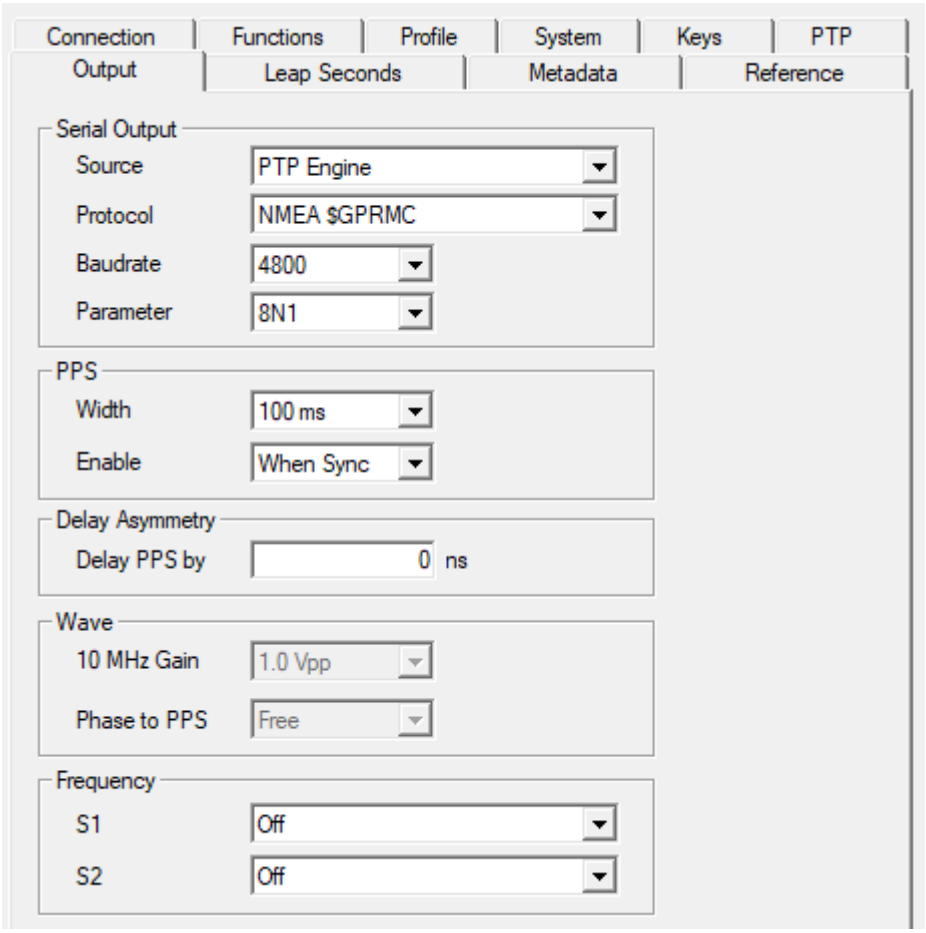


**Serial Output**

| | |
|---|---|
| **Protocol** | Data protocol used on TxD line. |
| **Baudrate** | Baud rate. |
| **Parameter** | Data bits, parity, stop bits. |

**PPS**

| | |
|---|---|
| **Width** | Width of positive PPS pulse. |
| **Enable** | Specifies when the PPC pulses will be enabled, at start-up or at first sync. |

Wave

| | |
|---|---|
| **10 MHz Gain** | Fixed to 1 $V_{PP}$ |
| **Phase to PPS** | Phase relationship of 10 MHz to PPS outputs. Adjustable in steps of 10 ns. |

Frequency

| | |
|---|---|
| **S1, S2** | Signal at BNC connectors S1 and S2. Can be PPS from GNSS receivers or a frequency synthesized by the PTP engine (including PPS). |

**Serial Output**

For compatibility with other Plura timecode equipment these settings are recommended:

| Protocol | Baudrate | Parameter | Remark |
|---|---|---|---|
| UTC Time+Date | 2400 | 7E2 | "Meinberg Std." |
| GPS Time+Date + Leap Seconds | 2400 | 7E2 | "Meinberg GPS" |
| NMEA $GPRMC | 4800 | 8N1 | |

The "UTC Time + Date " data protocol

32 characters of ASCII format: <STX>D:01.01.16;T:4;U:14.15.41;*uvxy*<ETX>

| | | | | |
|---|---|---|---|---|
| STX | start of text | $02 | | |
| D: | followed by the date | day.month.year | | |
| ; | | $3B | | |
| T: | followed by the day of week | 1-7, 1 = Monday | | |
| ; | | $3B | | |
| U: | followed by the time | hours.minutes.seconds<br>A leap second is transferred as second = 60 | | |
| ; | | $3B | | |
| *u* | status of time & date | # | ($23) | time of internal clock is not yet precise |
| | | ' ' | ($20) | time of internal clock is precise |
| *v* | SYNC and LOCK | * | ($2A) | SYNC or LOCK not yet reached |
| | | ' ' | ($20) | SYNC and LOCK |
| *x* | time zone indicator | U = UTC | | |
| *y* | announcement of a leap second event | A = announcement of a leap second event during the hour preceding the event<br>' ' = no announcement | | |
| ETX | end of text | $03 | | |

The "UTC Time + Date + Leap Seonds" data protocol

36 characters of ASCII format: <STX>D:01.01.16;T:4;U:14.15.41;*uvxy;nnn*<ETX>

32 characters of this data protocol are conforming to "UTC Time + Date". There are four additional characters:

| | | |
|---|---|---|
| ; | | $3B |
| *nnn* | UTC leap seconds | Number of UTC leap seconds, for example 035 at 17.02.2015 |

The "GPS Time + Date + Leap Seonds" data protocol

36 characters of ASCII format: <STX>D:01.01.16;T:4;U:14.15.41;*uvGy;lll*<ETX>

| | | |
|---|---|---|
| *nnn* | GPS leap seconds | Number of GPS leap seconds, for example 016 at 17.02.2015 |

This data protocol is identical to "UTC Time + Date + Leap Seconds" with the exception that time+date is in GPS timescale. That is indicated by a "G" (instead of "U") time zone indicator.

# 5.7 “Leap Seconds“: Setting the Leap Seconds

Leap seconds

UTC is the worldwide real-time reference. Occasionally, UTC will be corrected introducing a leap second. It is not possible to predict a leap second; the leap second is determined by the IERS (International Earth Rotation and Reference Systems Service) and will be announced at the Bulletin C. Up to now, all leap seconds have been inserted as last second before either 1st of January or 1st of July, regarding UTC time scale.

G3 receiving signals of a real-time reference

G3 needs to know the amount of leap seconds. In PTP slave mode leap seconds information is provided by PTP grandmaster. If G3 is in PTP grandmaster mode, if the serial protocol sent from the external real-time reference includes this information, G3 will take it for internal calculations. Otherwise, the amount of leap seconds has to be set manually at this tab.

> Please verify the protocol sent from the external real-time reference. The *UTC Time+Date + Leap Seconds* and the *GPS Time+Date + Leap Seconds (aka Meinberg GPS)* protocols contain the amount of leap seconds.

You can verify the correct leap second information at the status monitor: *Time and Date – Leap seconds* at the *System* tab indicates the amount of leap seconds taken for internal calculations.

It is recommended to keep the parameters at this tab updated. As soon as a leap second event is announced, update the *Further Leap Seconds* entry. After a leap second event, you can correct the *IERS Bulletin C* entries. Example (before UTC 0h 0m 0s @ January 1, 2017, a leap second has been inserted):

Parameters before January 2017

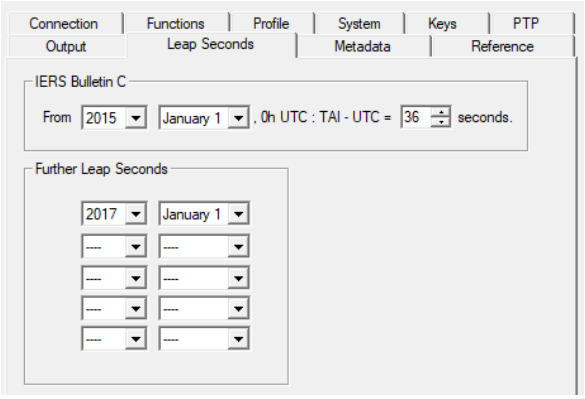


Parameters after January 2017

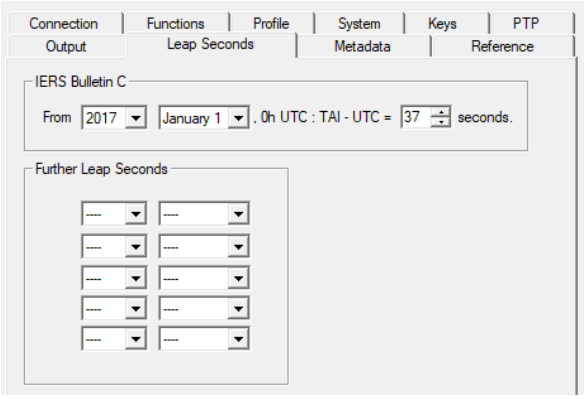

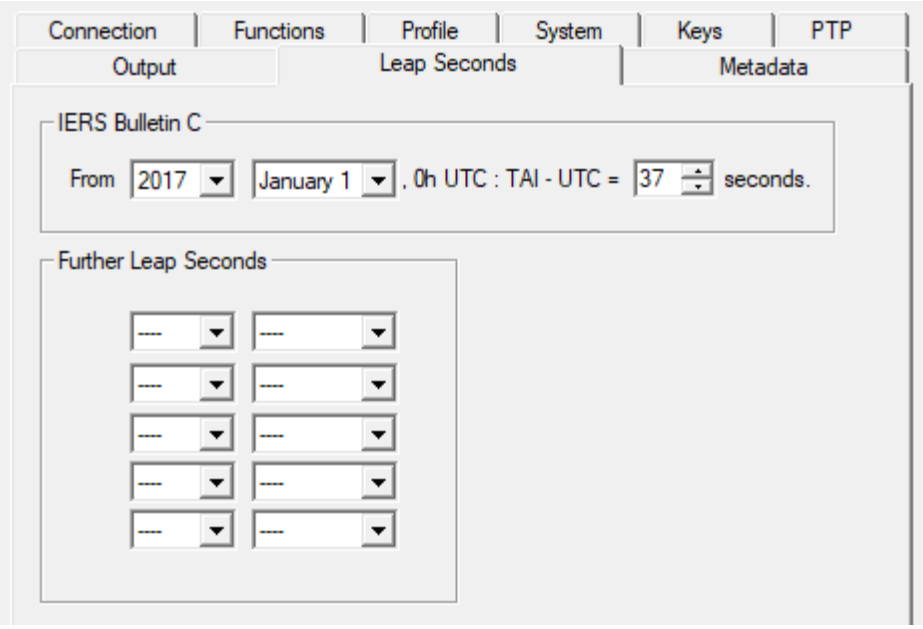


**IERS Bulletin C**

The leap second is determined by the IERS (International Earth Rotation and Reference Systems Service). The "Bulletin C", published by the IERS twice a year, contains the information about the current number of leap seconds and about an upcoming leap second event. Example:

```
from 2017 January 1, 0h UTC, until further notice : UTC-TAI = -37 s
```

This information can be entered here.

**Further Leap Seconds**

If upcoming leap second events are known, you can enter the date of this event. Up to now, all leap seconds have been inserted as last second before either 1st of January or 1st of July, regarding UTC time scale.

This entry allows either 1st of January, or 1st of April, or 1st of June, or 1st of October.

Changes in this tab are processed with a delay of about 30 seconds to allow entering consistent values.

# 5.8 “Metadata“: SMPTE Synchronization Metadata

Synchronization Metadata

SMPTE ST 2059-2:2015 defines synchronization metadata as an organization extension TLV (Type Length Value), processed as PTP management packets. G3 can send those metadata in PTP grandmaster mode or receive it in PTP slave mode.

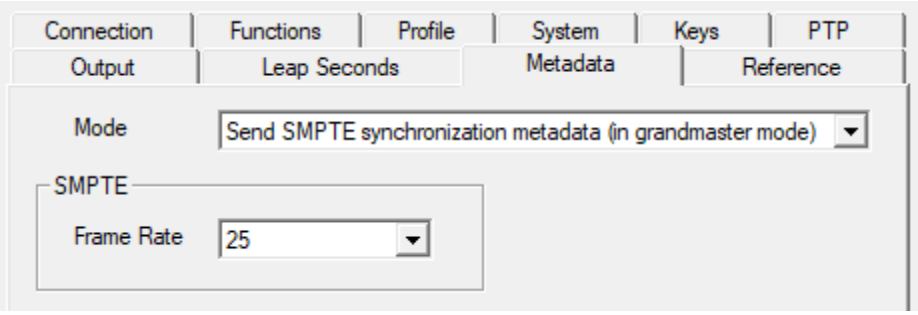


**Mode** Specifies if SMPTE synchronization metadata are received (useful in PTP slave mode) or sent (only possible in PTP grandmaster mode).

**SMPTE**

| | |
|---|---|
| **Frame Rate** | Specifies the system frame rate. |
| Possible values: | 23.98 to 60. |
| Default: | 25. |

# 5.9 “Reference“: PTP Real-Time Reference Input

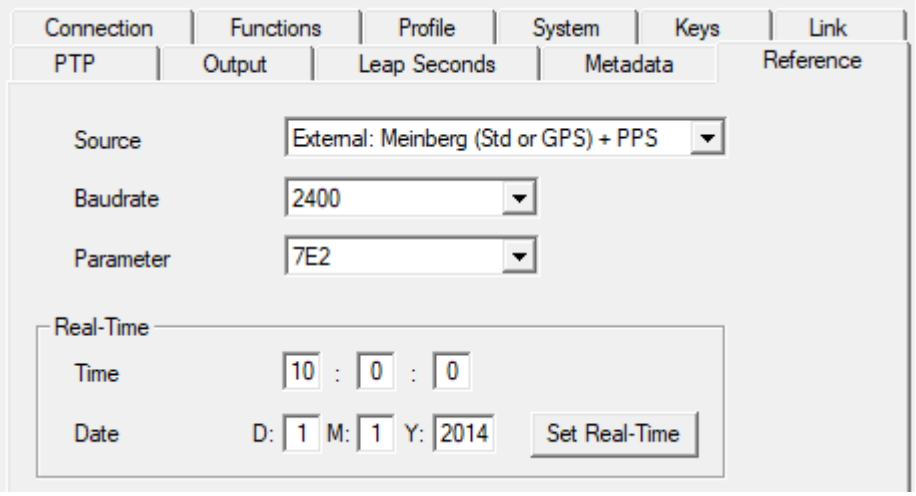


**Source** Source of real-time used in PTP grandmaster operating modes.

- GNSS Automatic: Get time+date from the GNSS receiver with the best reception quality.
- GNSS Receiver 1/2: Get time+date from GNSS receiver 1 or 2.
- External: NMEA $GPRMC + PPS,
- External: Meinberg (Std or GPS) + PPS,
- External: Meinberg Uni + PPS: Get time+date as an external serial data string + PPS from RJ45 **REF IN / GPI**.

**Baudrate** Baud rate.

**Parameter** Data bits, parity, stop bits.

For compatibility with other Plura timecode equipment these settings are recommended:

| Protocol | Baudrate | Parameter |
|---|---|---|
| NMEA $GPRMC | 4800 | 8N1 |
| Meinberg (Std or GPS) | 2400 | 7E2 |

**Real-Time**

| | |
|---|---|
| **Time, Date** | Time and date of the PTP engine can be manually set in free-run mode. This is only for test purposes and not recommended for production environments. |

# 5.10 “Link”: Communication between Modules

**Link** uses the Rubidium internal TC_link interface to transmit or receive data. This interface is shared by all the modules in one frame, and via the **RLC** connector it is possible to link further modules at different frames.

In case that the selected module should transmit data, **Link** selects the channel and the kind of data. The receiving module must select this channel as a reader input.

In case that the selected module should receive data, the **Link** function has to be activated (**Use**), and the selected channel (“Telegram” 1 or 2 or 3) has to be switched off.

Configuration (example shows a screen shot of the PC program tab):

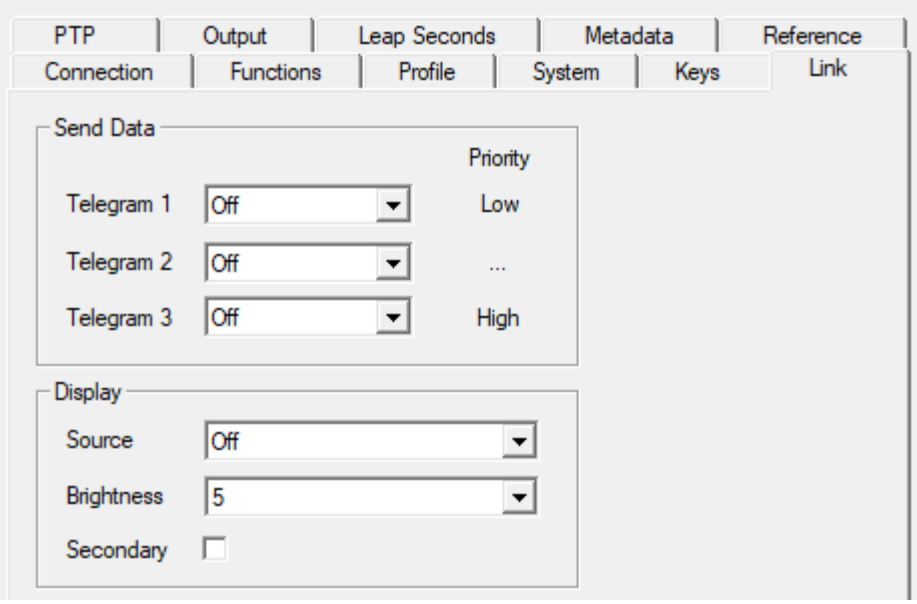


**Send Data**

| | |
|---|---|
| Three channels (**Telegram 1 - 3**) have been provided to transmit data in a time code format.<br>For each channel a function can be selected from the drop-down list: | |
| **Off** | This channel will not be used to transmit data, data can be received. |
| **Reference** | This channel transfers time and date (UTC). |

**Display**

| | |
|---|---|
| Adjust the parameters controlling the display of a RUBIDIUM **D1** or **Q1** chassis. | |
| **Source** | Select the kind of data to be sent and displayed:<br>*Off* No data will be sent from this module.<br>*Real-Time* Time of the reference (UTC) in a HH:MM:SS format.<br>*Date* Date of the reference (UTC) in a Day.Month.Year format. |
| **Brightness** | Adjust the brightness of the LEDs, steps 1 to 7. |
| **Secondary** | Address the ‘secondary’ display instead of the ‘primary’ display. |

# 5.11 “System“: Name, Boot, Info, Fan, IP, SNMP

Configuration (example shows a screen shot of the PC program tab):

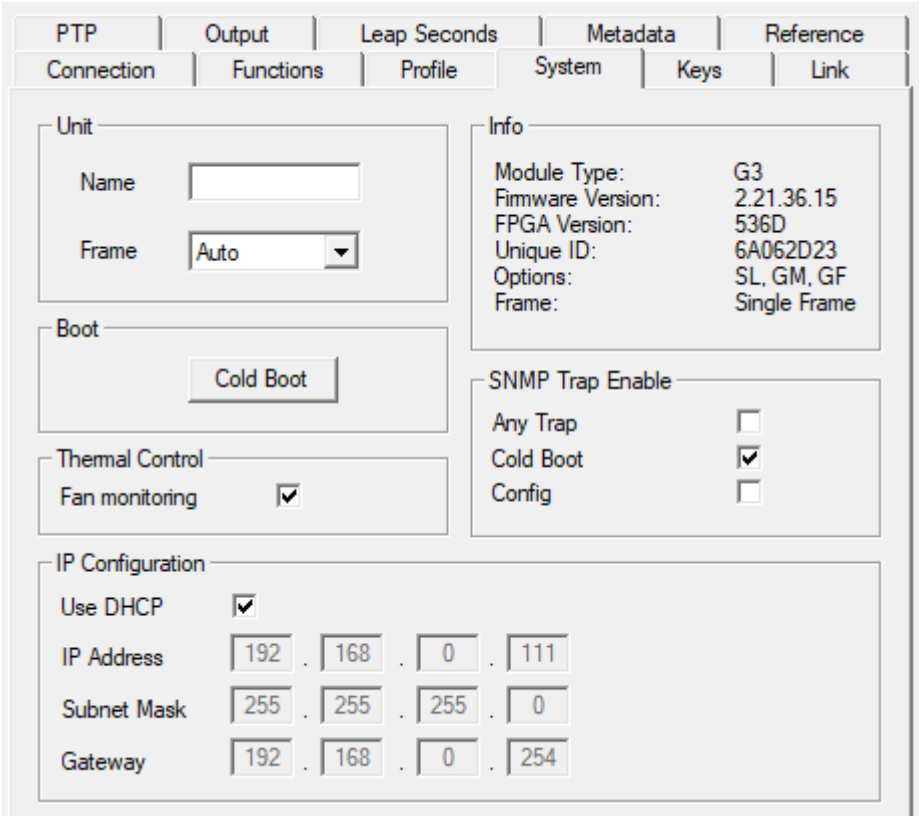


**Unit**

| | |
|---|---|
| **Name** | The connected module can get a name. You may enter, change, or verify this name at this window. |
| **Frame** | Modules in a network can be uniquely identified by a frame number and the module’s position within the frame. In a single frame system, you may select “Single” or “Auto” at this set-up. If a system is built-up of more than one frame, each frame has to receive a unique address (adjusted at the fan module). If you select “Auto”, the module will request this frame number automatically and will show it on the info box. Likewise, it is possible to select a frame number manually. |

**Boot**

| | |
|---|---|
| **Cold Boot** | Clicking this button enables a restart of the module. At first a window appears with the message that the operation of the module will stop during restart. Click **ok** to do the restart. |

**Thermal Control**

| |
|---|
| At least one module of each frame should have the fan monitoring activated. This enables the power supply monitoring – for power supplies within this frame - as well. |

**Info**

| |
|---|
| Displays module’s status information. |

**SNMP Trap Enable**

| |
|---|
| Activate the “Any Trap” check box to enable the SNMP functionality in general. If not checked, this module will not send any SNMP traps.<br>The individual traps can be enabled/disabled by a click on the corresponding check box. |

**IP Configuration**

| | |
|---|---|
| **Use DHCP** | If checked, the device will automatically request its IP parameters (IP address, subnet mask, and gateway) from a DHCP server. In this case the “IP Address”, “Subnet Mask”, and “Gateway” boxes have no relevance. |
| **IP Address** | IP address, manually set. |
| **Subnet Mask** | Subnet mask, manually set. |
| **Gateway** | Gateway, manually set. |

# Contact Us

plura®

Corporate Offices:
Plura Broadcast, Inc.
Ph: +1-602-944-1044
Sales@plurainc.com

Plura Europe GmbH
Ph: +49-6725-918006-70
Sales@plurainc.com

Plura MEA
Ph: +971-50-715-9625
Sales@plurainc.com

Plura Asia
Ph: +82-10-6688-8826
Sales@plurainc.com